REPAIR MANUAL
&
PARTS LIST

FOR

FUJICA AZ-1

FUJI FILM

FUJI PHOTO FILM CO., LTD.
26-30, Nishiazabu 2-Chome, Minato-ku, Tokyo 106, Japan

Inside Front Cover
Blank Page

Blank Page

CONTENTS

I PRECAUTIONS FOR WORKING ON ELECTRICAL SYSTEM OF AZ – 1 1

II DISASSEMBLY 3

1. Top cover assembly (1 – 5) 3
2. Amplifier assembly (8 – 1) 5
3. Shutter resistor assembly (2 – 1) 7
4. Exposure counter assembly (2 – 29) 9
5. Penta prism assembly (3 – 7) and photocell assembly (3 – 1) 11
6. Prism (3 – 12) 11
7. Focusing screen assembly (3 – 18) 11
8. Bottom cover assembly (1 – 77) 13
9. Lens mount assembly (2 – 62) 13
10. Self - timer assembly (3 – 41) 15
11. Synchro - contact plate assembly (3 – 64) and stopper plate assembly (3 – 77) 15
12. Focal plane shutter assembly (3 – 29) 17
13. Film chamber door assembly (7 – 106) 19
14. Main body assembly 19
15. Disassembling focal plane shutter assembly (3 – 29) 23

III REASSEMBLY, REPAIR AND ADJUSTMENT 29

1. Main body 29
2. Focal plane shutter assembly (3 – 29) 35
3. Installing focal plane shutter assembly (3 – 29) 41
4. Adjustment of shutter speed 59
5. Adjustment of 45° alignment of the mirror 69
6. Adjustment of positions of aperture resistor assembly (6 – 83) 71
7. Adjustment of SC switch assembly (6 – 58) 73
8. Installing lens mount assembly (2 – 62) and adjustment of flangeback 75
9. Viewfinder 77

10. Installing exposure counter (2 — 29) and adjusting advancement 81
11. Installing shutter resistor assembly (2 — 1) 81
12. Adjusting SM switch (8 — 4) and SN switch (8 — 5) 83
13. Adjusting film advancement lock and release mechanism 85
14. Installing lens mount assembly (2 — 62) 87
15. Electric circuit wiring 91
16. Adjustment of electrical system 93
16 — 1 Adjusting Vsf voltage 93
16 — 2 Checking AE lock operation 95
16 — 3 Adjusting exposure 97
16 — 4 Equipping the camera with strobo for Fujica AZ — 1 101
16 — 5 LED display 101
17. Method to check electrical parts for conditions 103
17 — 1 Amplifier assembly (8 — 1) (KL83A — 4) 103
17 — 2 LED assembly 107
17 — 3 Photocell (8 — 2) 107
17 — 4 Magnet assembly (coil (5 — 73) and magnet circuit assembly (8 — 8)) 107
17 — 5 Aperture resistor (8 — 7) 109
17 — 6 Shutter resistor (8 — 6) 109
17 — 7 SN switch (8 — 5) 111
18. Installing top cover assembly (1 — 5) 113
19. Installing film rewind knob assembly (1 — 58), bottom cover assembly (1 — 77) and film advance lever assembly (1 — 47) 115
19 — 1 Film rewind knob assembly (1 — 58) 115
19 — 2 Bottom cover assembly (1 — 77) 115
19 — 3 Film advance lever assembly (1 — 47) 115
20. Light shielding materials 117
21. Auto - winder function 117

IV **INSPECTION** 119

V **PARTS LIST** 124

I PRECAUTIONS FOR WORKING ON ELECTRICAL SYSTEM OF AZ-1

1. Polarity of the camera body (ground) is negative (−). When supplying power from a stabilized power supply equipment or batteries, exercise care for the power supply polarity. Be sure to use a stabilized power supply equipment equipped with a current limiting device which limits current to 70 mA.

2. When soldering parts or checking voltages, exercise care for the following matters.

   2−1 Soldering

   Be sure to ground the soldering iron, your body and amplifier (camera body).

   INSTRUCTIONS FOR GROUNDING

   - Connect all the grounding wires centrally to an aluminum plate (A), and ground the aluminum plate.
   - Firmly connect the grounding wires.
   - When grounding the soldering iron at the power supply side, measure resistance between the soldering iron head and power cord with a tester as shown in Fig. 1, and ground either side where resistance is closer to zero ohm.
   - When grounding from the camera, do not ground directly but through a conductive rubber (B) having 500 KΩ to 1 MΩ resistance.

   2−2 Round conductors for soldering and checking voltage

   - The amplifier circuit is provided with round conductors for checking voltage. When checking voltage, be sure to use the round conductors.
   - When connecting lead wires or parts, be sure to connect them to the round conductors provided for wiring.

Fig. 1

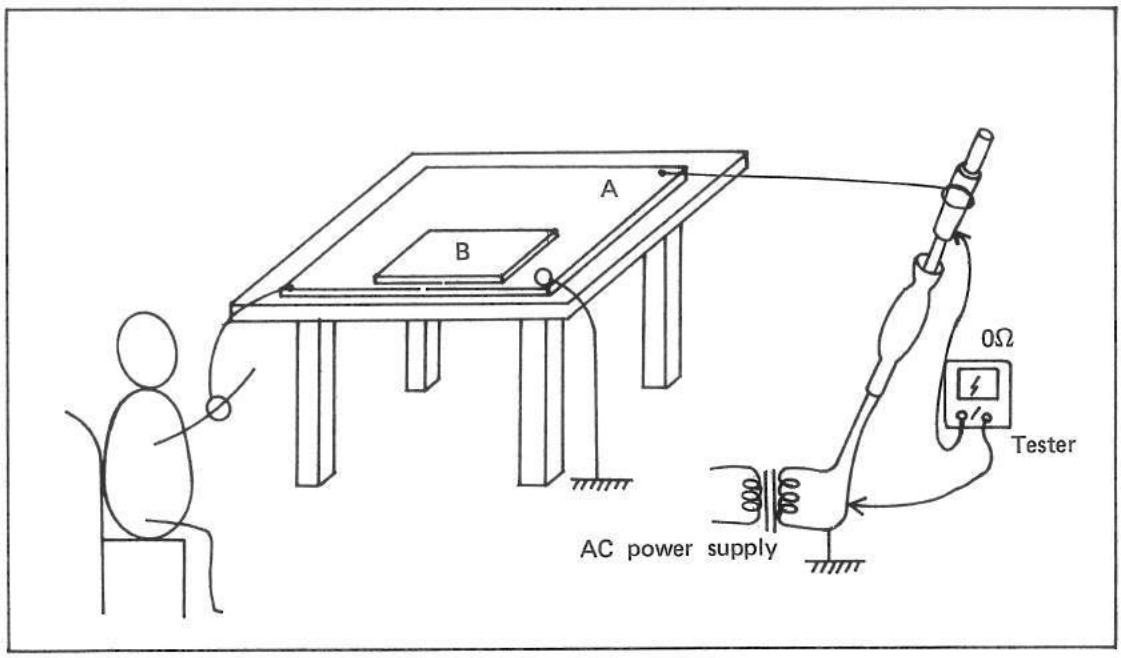

II DISASSEMBLY

1. Top cover Assembly (1 – 5)

a. Film rewind knob assembly (1 — 58)

Hold the rewind spindle (7 — 5), turn the film rewind knob assembly (1 — 58) counterclockwise and remove it.

b. Film advance lever assembly (1 — 47)

The film advance lever assembly is installed on the top cover assembly (1 — 5), and the removal is not required.

c. Remove the battery chamber cover (1 — 2).

d. Ring (1 — 57)

Turn the ring counterclockwise with a piece of rubber or repair tool (KL74A ST605 — J306).

e. Remove two set screws (1 — 56).

f. Pull the top cover assembly (1 — 5) slowly and carefully toward the upper direction, and separate it from the camera body.

NOTE: Pay particular attention on the lead wires connected to the hot shoe. Be careful not to lose the coupler assembly (1 — 83) and coupler assembly (1 — 67).

Fig. 2

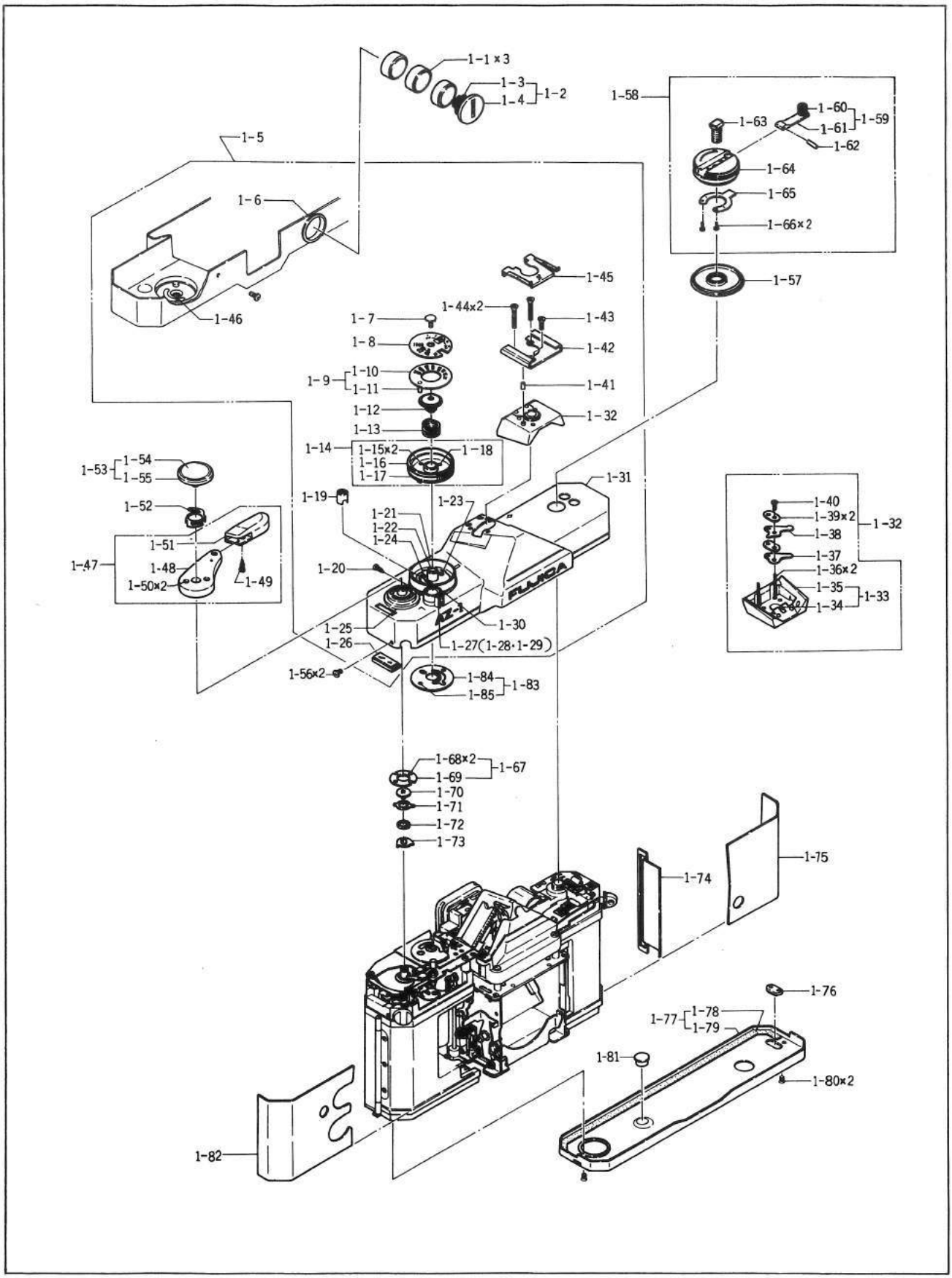
1-1×3
1-3
1-4
1-2
1-58
1-60
1-61
1-59
1-63
1-62
1-64
1-65
1-66×2
1-5
1-6
1-45
1-57
1-46
1-44×2
1-43
1-7
1-8
1-42
1-9
1-10
1-11
1-41
1-12
1-32
1-13
1-14
1-15×2
1-18
1-16
1-17
1-53
1-54
1-55
1-31
1-52
1-19
1-23
1-21
1-22
1-24
1-51
1-47
1-48
1-50×2
1-49
1-20
1-25
1-26
1-30
1-27(1-28·1-29)
1-56×2
1-84
1-85
1-83
1-40
1-39×2
1-38
1-37
1-36×2
1-35
1-34
1-33
1-68×2
1-69
1-67
1-70
1-71
1-72
1-73
1-74
1-75
1-76
1-77
1-78
1-79
1-81
1-80×2
1-82
FUJICA
AZ-1

2. Amplifier assembly (8 – 1)

a. Unsolder and disconnect the 20 lead wires (8 – 20, 8 – 21, 8 – 34, 8 – 23, 8 – 24, 8 – 22, 8 – 53, 8 – 54, 8 – 52, 8 – 51, 8 – 39, 8 – 50, 8 – 37, 8 – 36, 8 – 38, 8 – 29, 8 – 28, 8 – 35, 8 – 31 and 8 – 30) from the amplifier assembly (8 – 1) at the positions indicated on the circuit diagram with dot marks.

16 — 2 Checking AE lock operation

- With the shutter release button depressed in a half way (with the SM and SN switches turned on), look into the viewfinder to insure that LED display does not change even if brightness of a light source is changed.

  When LED display changes, the AE lock circuit is abnormal. Measure voltage at the amplifier terminal (h). When the measured voltage is 0.2V or less, the AE lock circuit is normal. When the measured voltage is higher than 0.2V, the SA switch (8 —9) and electrical parts on the amplifier circuit (I) are abnormal.

- Make sure that LED goes out when the shutter release button is freed from depression (SN switch is turned off). Depress the shutter release button again in a half way and make sure that the appropriate LED lights according to the brightness of light source.

  When the LED does not go out or does not light, the SN switch on - off operation is abnormal or the transistor circuit of the amplifier circuit (II) is abnormal. Check the transistor for soldering and other circuits relative to the transistor.

Fig. 64

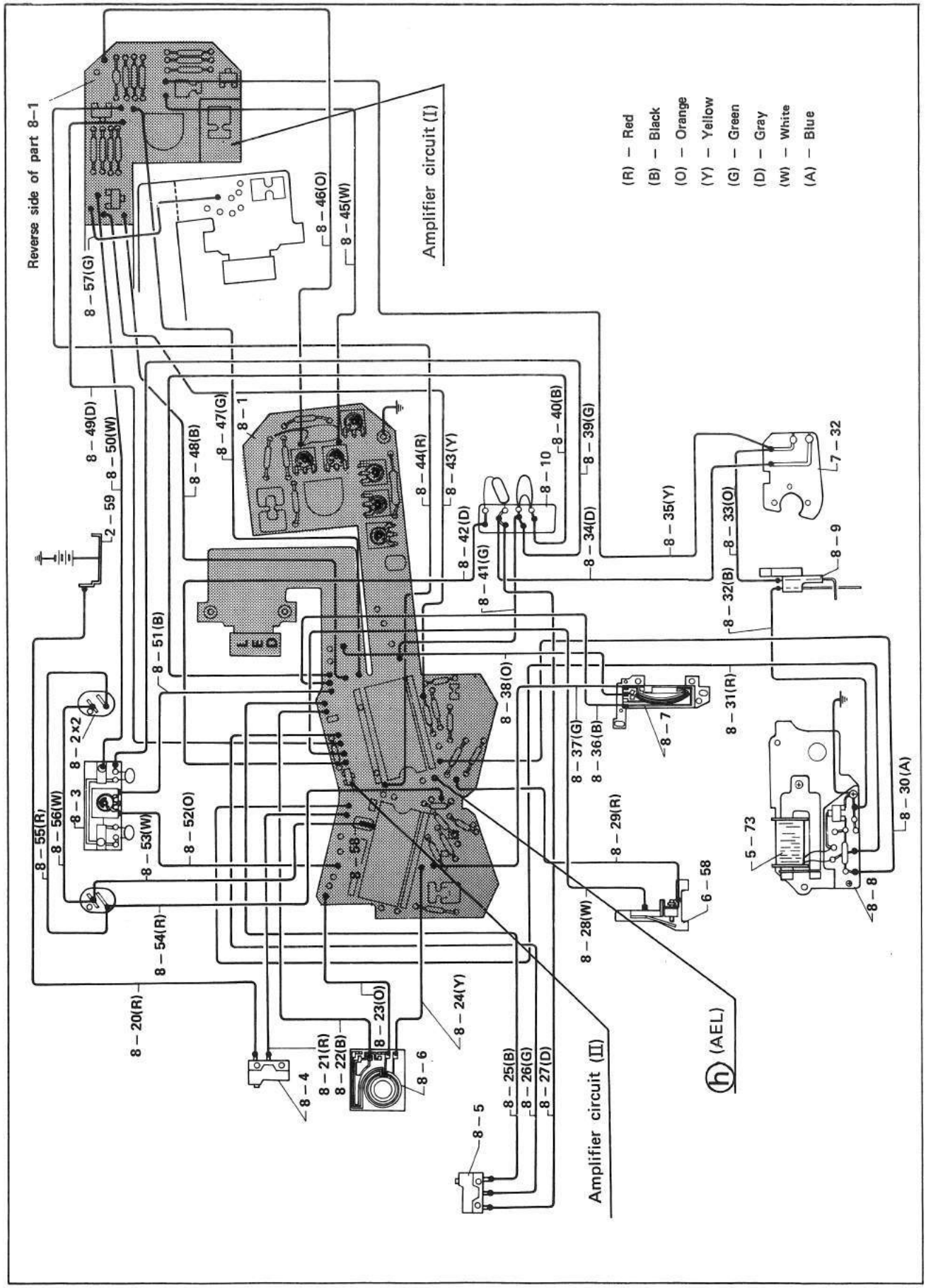
Reverse side of part 8-1
Amplifier circuit (I)
Amplifier circuit (II)
(R) – Red
(B) – Black
(O) – Orange
(Y) – Yellow
(G) – Green
(D) – Gray
(W) – White
(A) – Blue
(AEL)
8 – 57(G)
8 – 46(O)
8 – 45(W)
8 – 49(D)
8 – 50(W)
8 – 48(B)
8 – 47(G)
8 – 1
8 – 44(R)
8 – 43(Y)
8 – 40(B)
8 – 39(G)
8 – 10
8 – 42(D)
8 – 41(G)
8 – 34(D)
8 – 35(Y)
8 – 33(O)
7 – 32
8 – 9
8 – 32(B)
2 – 59
8 – 51(B)
8 – 38(O)
8 – 37(G)
8 – 36(B)
8 – 7
8 – 31(R)
8 – 2×2
8 – 3
8 – 55(R)
8 – 56(W)
8 – 53(W)
8 – 52(O)
8 – 58
8 – 29(R)
5 – 73
8 – 30(A)
6 – 58
8 – 8
8 – 28(W)
8 – 54(R)
8 – 20(R)
8 – 23(O)
8 – 24(Y)
8 – 21(R)
8 – 22(B)
8 – 6
8 – 4
8 – 25(B)
8 – 26(G)
8 – 27(D)
8 – 5

16 — 3 Adjusting exposure

LED light up position and exposure are adjusted at the same time. For example, when LED 500 displays, 1/500 second shutter speed signal must be delivered out at the magnet assembly. Thus, when an LED display does not agree with actual exposure, the cause exists in the time between turn off of the SC switch and starting of the 1st blind traveling and in the time between turn off of the magnet and ending of the 2nd blind traveling.

a. Mount an EBC Fujinon F1.8/55 mm lens on the camera body, and set the camera as indicated below:

1). Shutter speed selector dial:	"AUTO" "ASA100"
2). Aperture selector:	F5.6
3). Source voltage:	DC 4.0V (Three G13/1.5V batteries will provide this voltage)

NOTE:

- Be sure to mount a lens having a notch for full aperture metering.
- A lens having no notch for full aperture metering is for stopped-down aperture metering. Use a lens of this kind with the stop-down aperture button depressed so that the aperture is stopped down to the minimum.
- With a lens having a notch for full aperture metering, stopped-down aperture metering cannot be performed.

b. Face the camera toward a light source of LV11 (718 rlx) and adjust the variable resistor (8 — 68) so that luminosity at the film plane is 0.08 lx-sec. Make sure that the LED seen in the viewfinder indicates 60.

NOTE: Be sure to adjust the variable resistor with the top cover installed, and perform the adjustment through the opening provided for the adjustment.

c. Check exposures at other light values.

Fig. 65

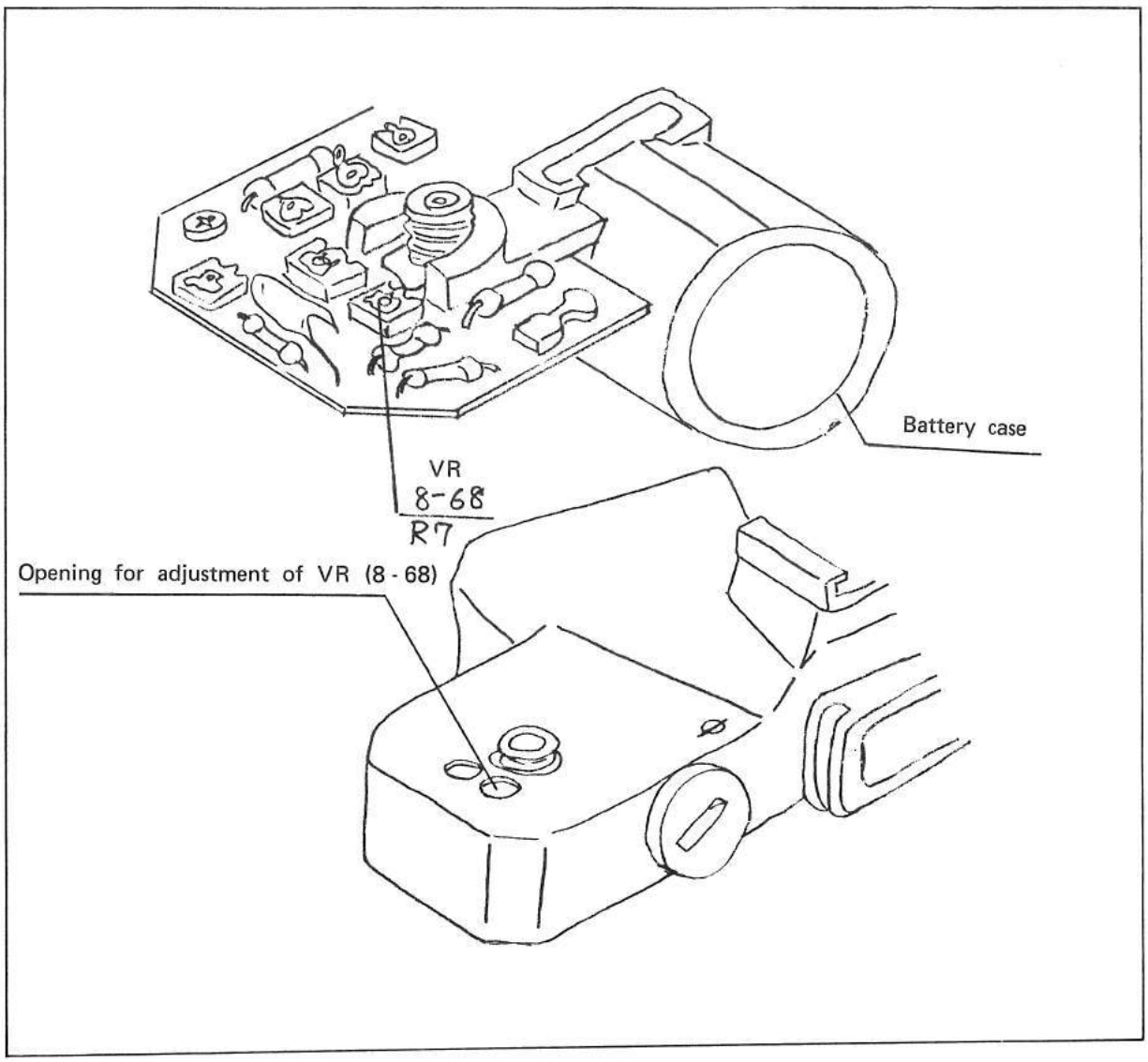

Table 3

ASA 100 F:5.6

LV (luminosity)	Exposure			Indication seen in the viewfinder		
	Standard	Permissible tolerance		Standard	Permissible tolerance	
LV7 (89.7rlx)	0.08lx – sec	±1.0 EV	0.04 ~ 0.16 lx - sec	2 – 15	±1.0 EV	2 – 15
LV11 (718 rlx)	0.08lx – sec	±1.0 EV	0.04 ~ 0.16 lx - sec	60	±1.0EV	30 – 125
LV14 (5744rlx)	0.08lx – sec	±1.0EV	0.04 ~ 0.16 lx - sec	500	±1.0 EV	250 – 1000
LV15 (11488rlx)	0.08lx – sec	±1.0EV	0.04 ~ 0.16 lx - sec	1000	±1.0 EV	500 – flink

d. Adjusting exposure for LV14 and LV15

When exposures for LV14 and LV15 are under or over against those for LV11 and LV7:

1). Make sure that both exposures for LV14 and LV15 are under or over against those for LV11 and LV7. When exposure for LV14 is under but that for LV15 is over against those for LV11 and LV7 or exposure for LV14 is over but that for LV15 is under against those for LV11 and LV7, reduce gap between the 2nd blind stopper assembly (5 — 63) and hook lever (5 — 91) so that both exposures for LV14 and LV15 are under or over against those for LV11 and LV7.

2). When exposures for LV14 and LV15 are under against those for LV11 and LV7, and 2nd blind delaying capacitor (8 — 123) accordingly as indicated below:

When approximately 1/2 EV under:	0.01μF
When approximately 1 EV under:	0.022μF
When approximately 2 EV under:	0.047μF

NOTE: Exercise care for polarity of the capacitor (8 — 123).

3). When exposures for LV14 and LV15 are over against those for LV11 and LV7, take the following actions:

- Remove 2nd blind delaying capacitor (8 — 123), if used.
- Increase force of the spring (5 — 94).
- Clean the attracted surface of the core (5 — 74).
- Check the lever (5 — 91) for motion.
- Make sure that blind velocity is 12 msec.
- When over exposure cannot be corrected through the corrective actions described above, check positions of the 1st and 2nd blinds. (Refer to III — 2 — 4 above).

Fig. 66

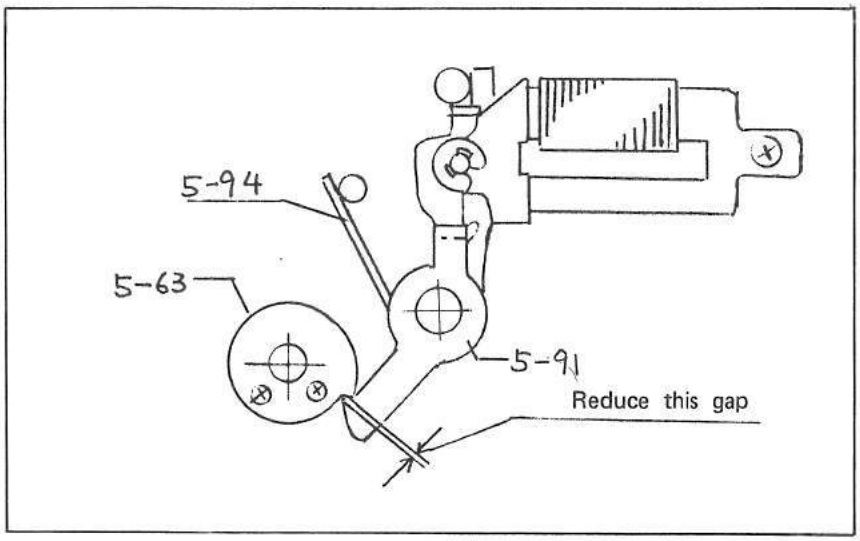

Fig. 67

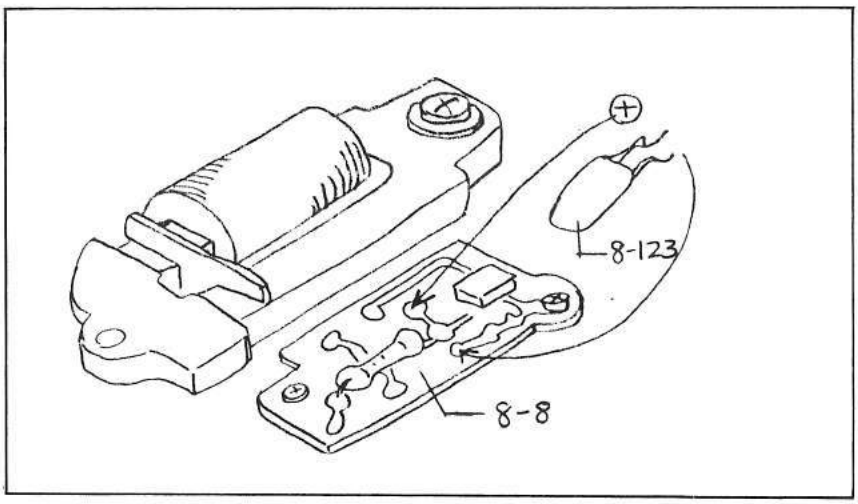

Table 4

Color identification for capacitor

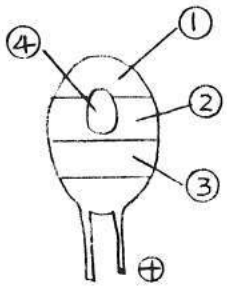

Color	Static capacity (PF)			Rated voltage
Black	① 0	② 0	③	④ 10
Brown	1	1	X10	
Red	2	2	$X10^2$	
Orange	3	3	$X10^3$	
Yellow	4	4	$X10^4$	6.3
Green	5	5	$X10^5$	16
Blue	6	6	$X10^6$	20
Purple	7	7	$X10^7$	
Gray	8	8	$X10^8$	25
White	9	9	$X10^9$	3.15
Pink				35

16 — 4 Equipping the camera with strobo for Fujica AZ — 1

Check the Sfl circuit as described below.

- Mount a strobo on the hot shoe and look into the viewfinder to insure that LED lights at 60. Further, measure shutter speed with a shutter tester to insure that shutter speed is 1/60sec. (11.4 to 21.3 msec).
- Checking method
  Short circuit the hot shoe terminal with the accessory shoe (ground).
- When condition is abnormal, check the printed circuit board (I).

16 — 5 LED display

- The LED for over/under exposure warning starts to blink (8 Hz) when exposure is 2/3 EV over or under the correct exposure.
- The LED for low voltage warning starts to blink (16 Hz) when voltage drops to 3.4 to 3.6V. When voltage drops down to 3.2V or below, the LED does not blink and correct exposure cannot be provided.

Fig. 68

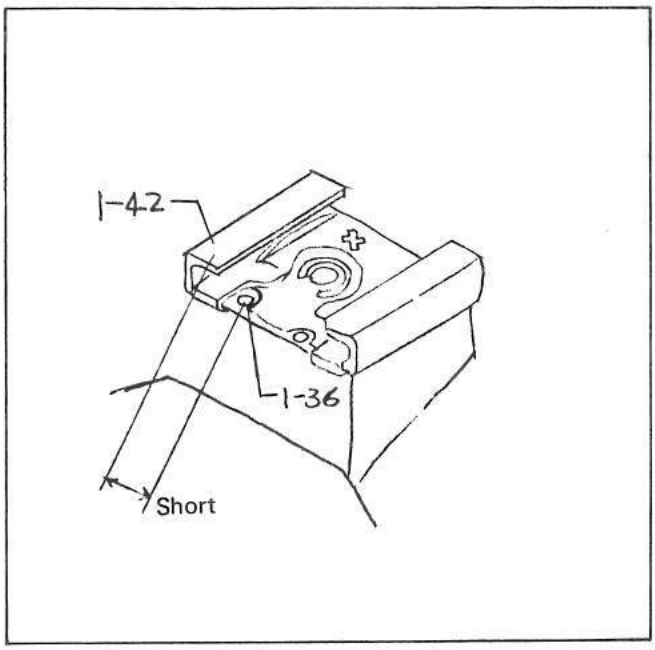
1-42
1-36
Short

Fig. 69

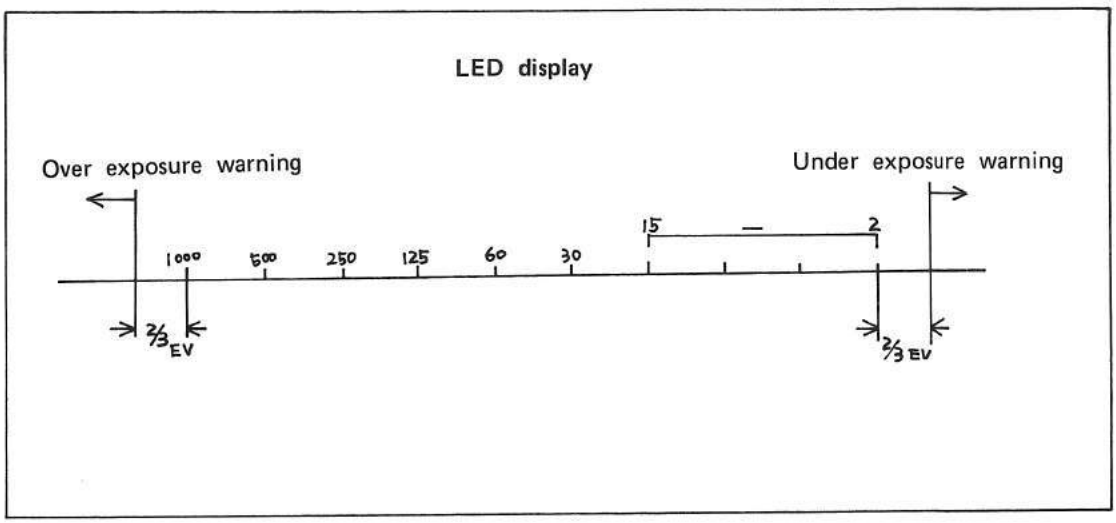
LED display
Over exposure warning
Under exposure warning
1000
500
250
125
60
30
15
2
2/3 EV
2/3 EV

17. Method to check electrical parts for conditions

17 — 1 Amplifier assembly (8 — 1) (KL83A — 4)

a. Check each point for voltage.

b. When voltage at any point is abnormal, check the relative parts for connection (soldering) and wiring, and when the parts and wiring are normal, replace the amplifier assembly (8 — 1) with a new one.

c. Voltage at each terminal indicated on the following table is voltage against the camera body (ground, minus) with DC 4.0V applied (with the camera loaded with new batteries) and with the SN switch (8 — 5) turned on.

Terminal	Voltage	
a (VS)	50 — 300 mV	F5.6 (1.8/55 mm lens) ASA100, LV10 to 12
b (Vref)	2500±10 mV	Constant voltage
d (Ph out)	△ 40mV	When input light is changed, voltage must change △ 40mV per EV.
e (Sf out)	2400±50 mV △ 40mV	F1.8 (1.8/55 mm lens) ASA100 When S-value and F-value are changed, voltage must change △ 40 mV per EV.
f (Vt out)	The center voltage should be approximately 1800 mV.	Adjusted to 1200 to 2400 mV by coinciding it with the constant of the logic circuit.
g (β)	2V or higher to 0.2V or less	With 5.1 KΩ loaded, voltate should be 2V or higher before releasing shutter and it should become 0.2V or less within 17 to 19 msec after releasing the shutter.

Fig. 70

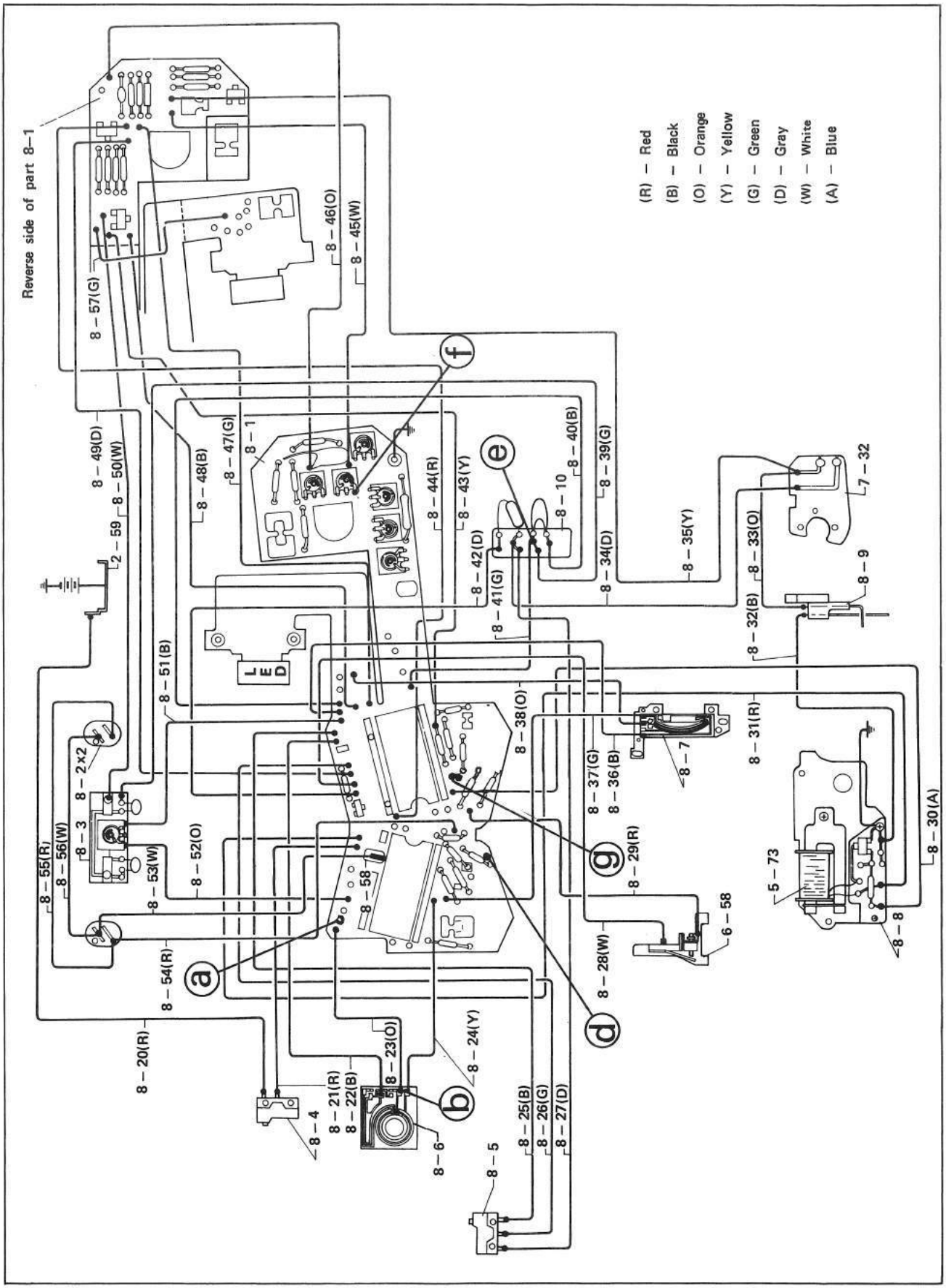
Reverse side of part 8-1
(R) – Red
(B) – Black
(O) – Orange
(Y) – Yellow
(G) – Green
(D) – Gray
(W) – White
(A) – Blue
8 – 57(G)
8 – 46(O)
8 – 45(W)
8 – 49(D)
8 – 50(W)
2 – 59
8 – 48(B)
8 – 47(G)
8 – 1
8 – 44(R)
8 – 43(Y)
8 – 40(B)
8 – 39(G)
8 – 10
8 – 42(D)
8 – 41(G)
8 – 34(D)
8 – 35(Y)
8 – 33(O)
7 – 32
8 – 9
8 – 32(B)
8 – 51(B)
L E D
8 – 38(O)
8 – 37(G)
8 – 36(B)
8 – 7
8 – 31(R)
8 – 2x2
8 – 3
8 – 55(R)
8 – 56(W)
8 – 53(W)
8 – 52(O)
8 – 58
8 – 29(R)
5 – 73
8 – 30(A)
6 – 58
8 – 8
8 – 28(W)
8 – 54(R)
8 – 20(R)
8 – 23(O)
8 – 24(Y)
8 – 21(R)
8 – 22(B)
8 – 4
8 – 6
8 – 25(B)
8 – 26(G)
8 – 27(D)
8 – 5
a
b
d
e
f
g

Fig. 3

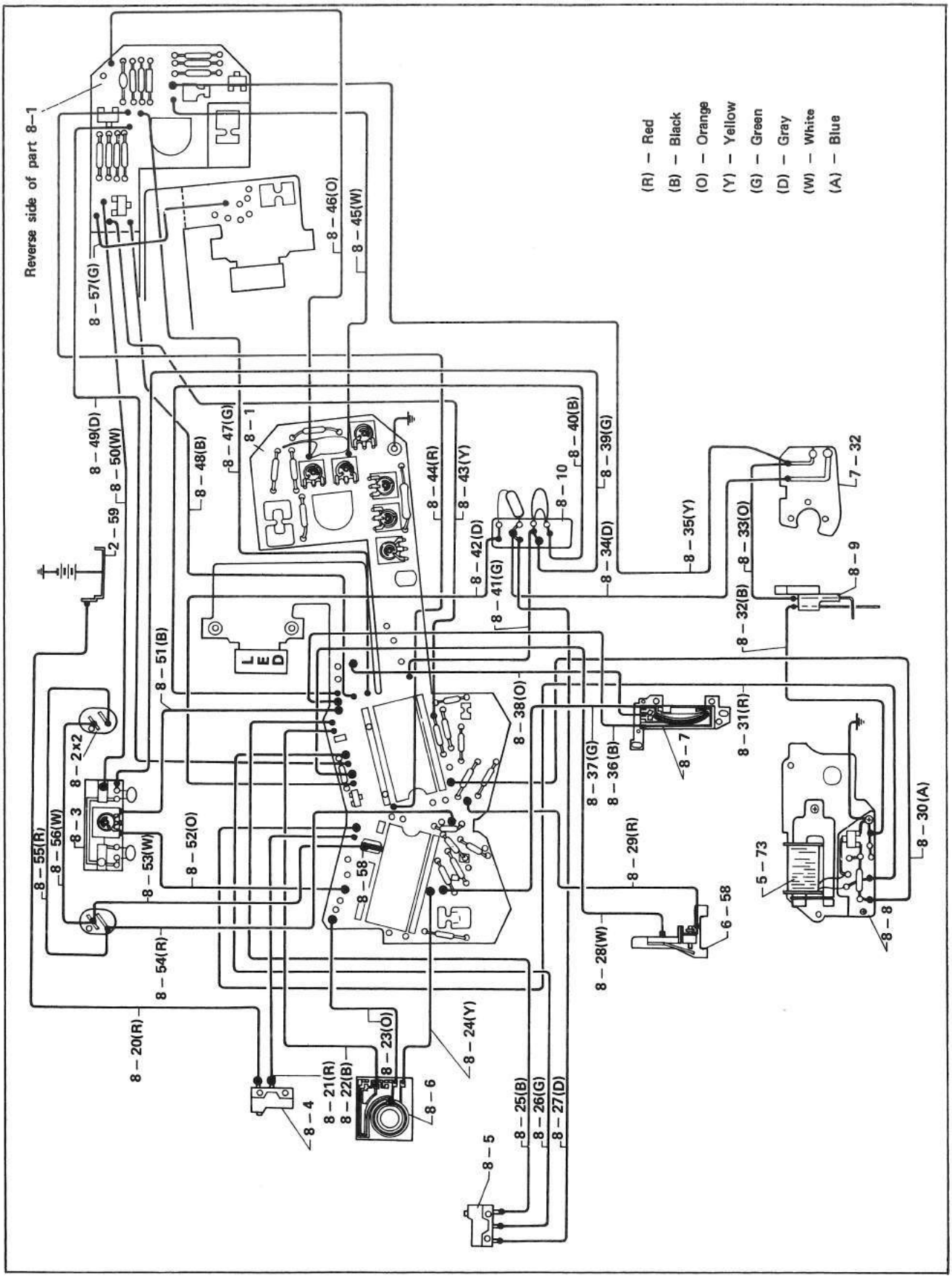
Reverse side of part 8-1
(R) – Red
(B) – Black
(O) – Orange
(Y) – Yellow
(G) – Green
(D) – Gray
(W) – White
(A) – Blue
8 – 57(G)
8 – 46(O)
8 – 45(W)
8 – 49(D)
8 – 50(W)
8 – 48(B)
8 – 47(G)
8 – 1
8 – 44(R)
8 – 43(Y)
8 – 40(B)
8 – 39(G)
8 – 10
8 – 42(D)
8 – 41(G)
8 – 34(D)
8 – 35(Y)
8 – 33(O)
7 – 32
8 – 9
8 – 32(B)
2 – 59
8 – 51(B)
L E D
8 – 38(O)
8 – 37(G)
8 – 36(B)
8 – 7
8 – 31(R)
8 – 2x2
8 – 3
8 – 56(W)
8 – 55(R)
8 – 53(W)
8 – 52(O)
8 – 58
8 – 29(R)
5 – 73
8 – 30(A)
6 – 58
8 – 8
8 – 28(W)
8 – 54(R)
8 – 20(R)
8 – 23(O)
8 – 24(Y)
8 – 21(R)
8 – 22(B)
8 – 6
8 – 4
8 – 25(B)
8 – 26(G)
8 – 27(D)
8 – 5

d. Variable resistors on the amplifier assembly (8 — 1)

The resistors have been adjusted as indicated on the following table. When repairing, do not touch the resistors except for the variable resistor R7 (8 — 68) (for adjustment of exposure level).

Variable resistor		
R1 (8 — 73)	Constant voltage adjustment (Vref)	For 2500±10 mV setting
R3 (8 — 76)	Oscillation frequency adjustment (Os4)	For 12288±50 Hz setting
R4 (8 — 72) R6 (8 — 71)	S - value F - value calculation adjustment (Vsf)	
R5 (8 — 75) R6 (8 — 71)	Analogue - digital conversion adjustment	
R7 (8 — 68)	Exposure value level adjustment (Vs)	

Display and exposure time are controlled by converting analogue signal to digital signal. One digit is divided into three 1/3 EVs.

Fig. 71

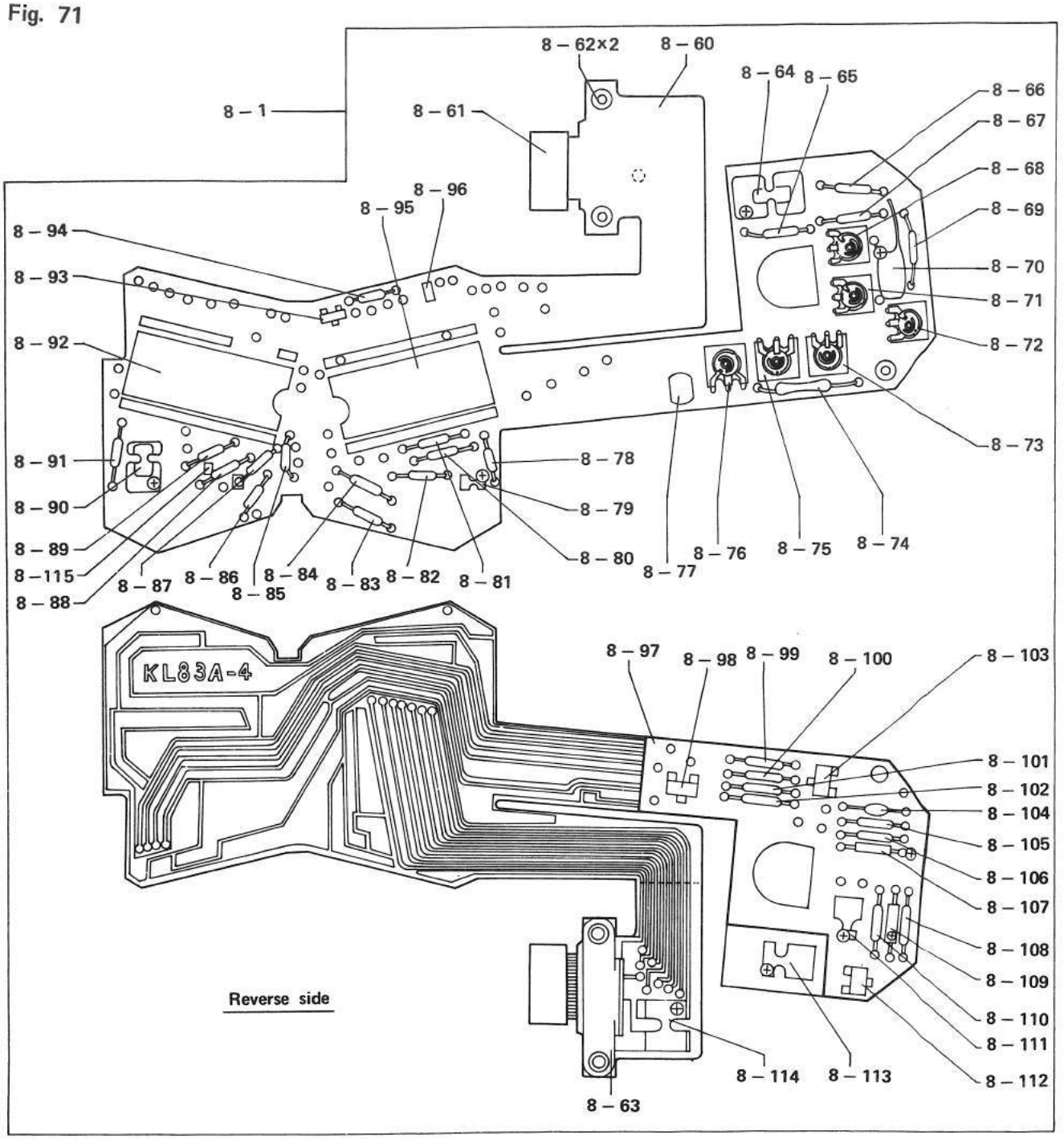
8 – 1
8 – 62×2
8 – 60
8 – 61
8 – 64
8 – 65
8 – 66
8 – 67
8 – 68
8 – 69
8 – 70
8 – 71
8 – 72
8 – 73
8 – 94
8 – 93
8 – 92
8 – 95
8 – 96
8 – 91
8 – 90
8 – 89
8 –115
8 – 88
8 – 87
8 – 86
8 – 85
8 – 84
8 – 83
8 – 82
8 – 81
8 – 78
8 – 79
8 – 80
8 – 77
8 – 76
8 – 75
8 – 74
KL83A-4
8 – 97
8 – 98
8 – 99
8 – 100
8 – 103
8 – 101
8 – 102
8 – 104
8 – 105
8 – 106
8 – 107
8 – 108
8 – 109
8 – 110
8 – 111
8 – 112
8 – 114
8 – 113
8 – 63
Reverse side

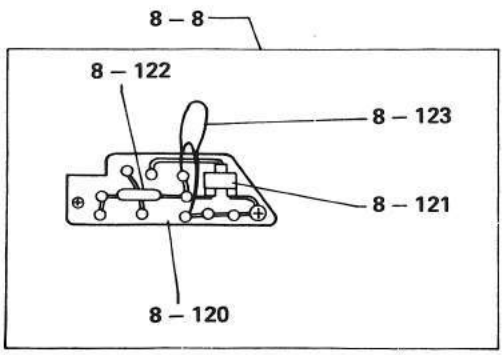
8 – 8
8 – 122
8 – 123
8 – 121
8 – 120

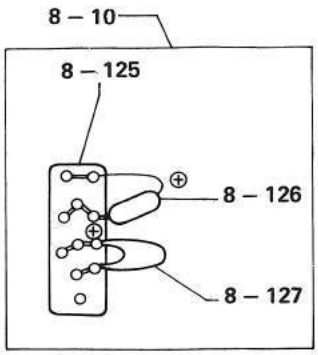
8 – 10
8 – 125
8 – 126
8 – 127

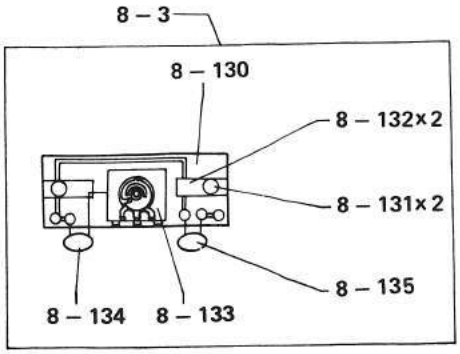
8 – 3
8 – 130
8 – 132×2
8 – 131×2
8 – 135
8 – 134
8 – 133

17 — 2 LED assembly

Apply 700 μA to 1 mA to the LED terminal, and make sure that the LED lights. When the LED does not light, the LED assembly is defective.

17 — 3 Photocell (8 — 2)

- Make sure that 50 to 300 mV is delivered to the terminal (a) (Vs).
- With th camera mounted with an F1.8/55 mm lens, set aperture to F5.6, set ASA to 100, and make sure that 700 to 100 mV is delivered to terminal (d) at LV10 to 12. Change input light 1EV, and make sure that voltage △ 40 mV per EV. (Refer to Fig. 70)

17 — 4 Magnet assembly (coil (5 — 73) and magnet circuit assembly (8 — 8))

Apply voltage as shown on Fig. 73, and make sure that the magnet holds.

Fig. 72

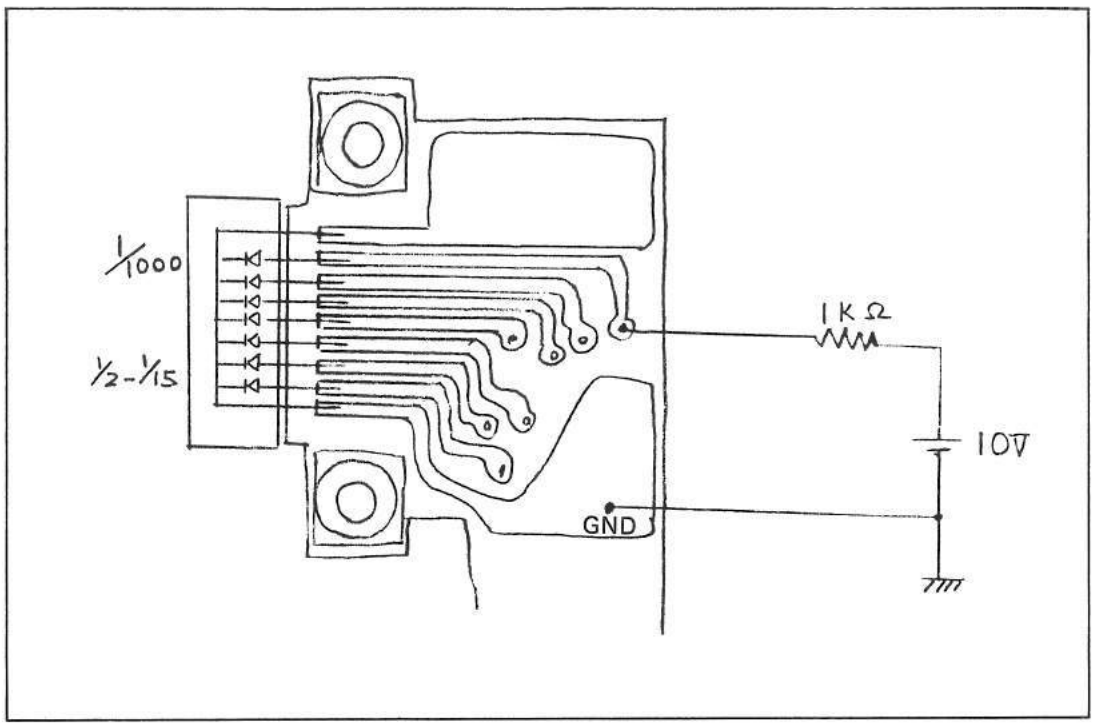

Fig. 73

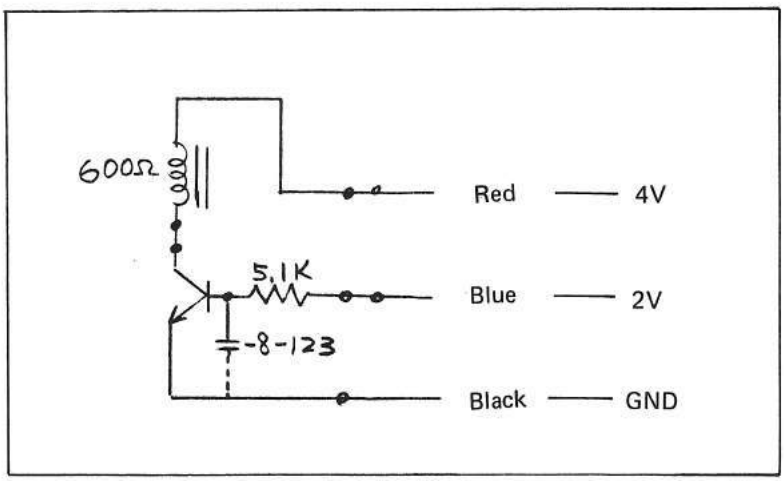

17 — 5 Aperture resistor (8 — 7)

When the aperture resistor is normal, resistance across the terminals shown in Fig. 74 is 2.15±0.2 KΩ.

When the correct resistance cannot be provided, replace the aperture resistor (8 — 7) with a new one.

17 — 6 Shutter resistor (8 — 6)

When the shutter resistor is normal, resistance across the terminals shown in Fig. 75 is 4.16±0.4 KΩ.

When the correct resistance cannot be provided, replace the shutter resistor (8 — 6) with a new one.

Fig. 74

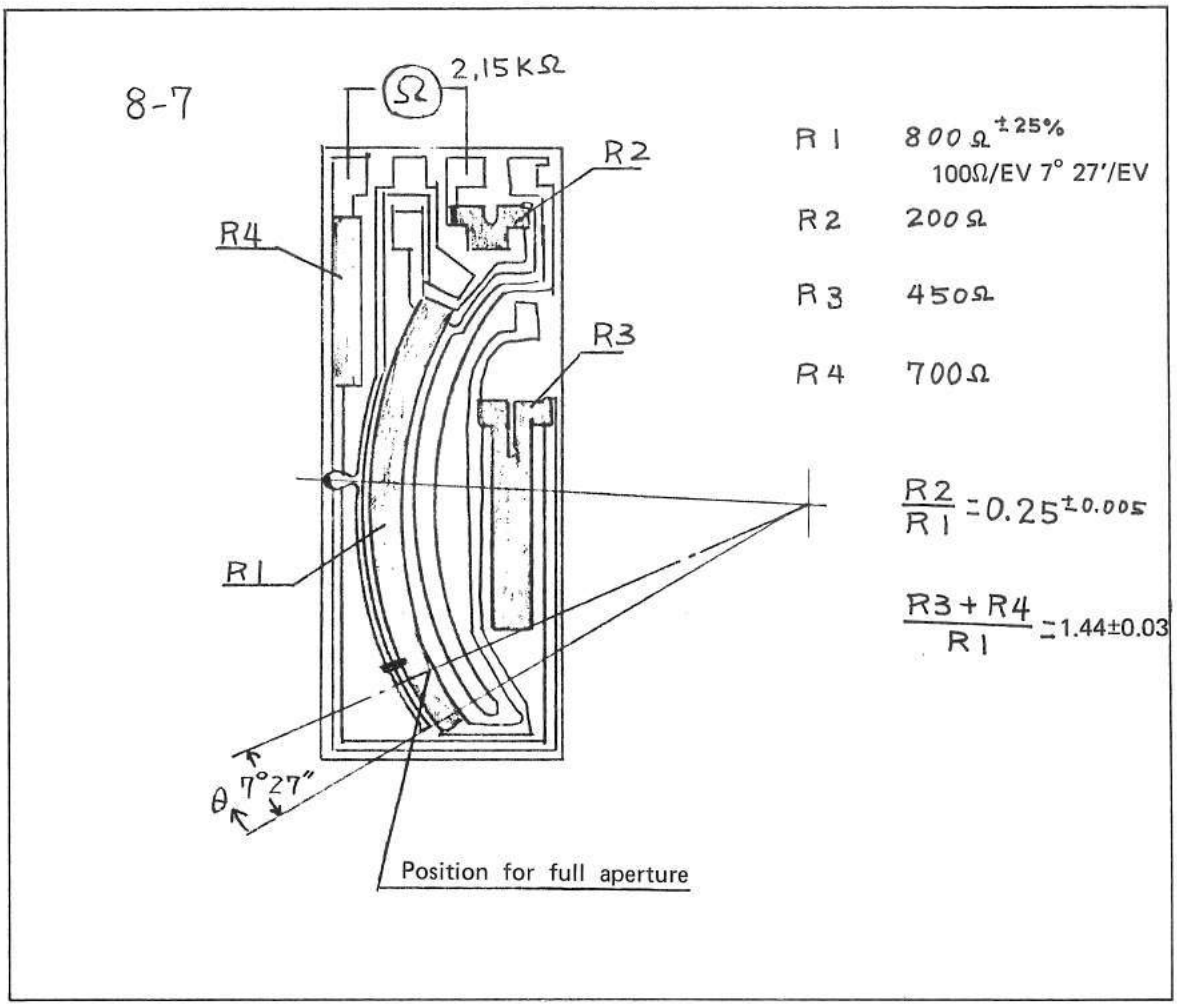
8-7
2,15KΩ
R2
R4
R3
R1
θ 7°27"
Position for full aperture
R1 800Ω ±25%
100Ω/EV 7° 27'/EV
R2 200Ω
R3 450Ω
R4 700Ω
R2/R1 = 0.25 ±0.005
(R3+R4)/R1 = 1.44±0.03

Fig. 75

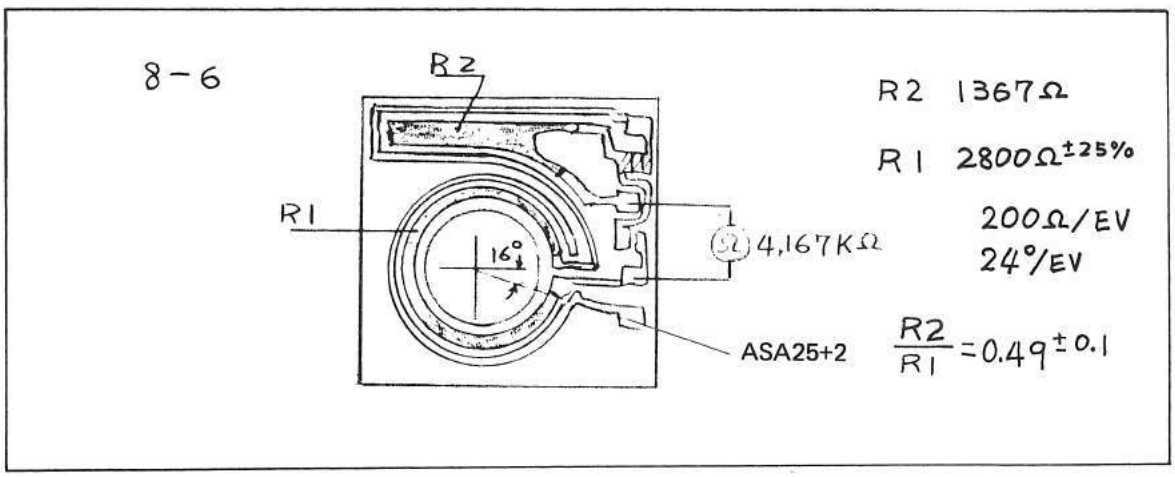
8-6
R2
R1
16°
4,167KΩ
ASA25+2
R2 1367Ω
R1 2800Ω ±25%
200Ω/EV
24°/EV
R2/R1 = 0.49 ±0.1

17 — 7 SN switch (8 — 5)

With the lead wires connected, make sure that voltages on lead wires (8 — 26) and (8 — 27) change over as indicated in Fig. 76.

Fig 76

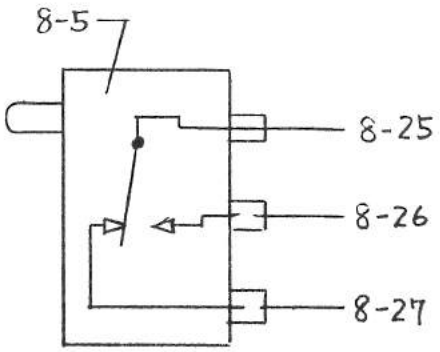

	SN – OFF	SN – ON
Black	GND	GND
Green	0V	Approx. 2V
Gray	Approx. 2V	0V

18. Installing top cover assembly (1 – 5)

a. Positioning parts

- Set the shutter speed selector dial assembly (1 — 14) to Auto ASA100.
- Set the coupler (2 — 3) to Auto ASA100 position, and place the coupler assembly (1 — 83) on the coupler (2 — 3).
- Place the coupler assembly (1 — 67) on the square hole plate (1 — 71).

b. Check the two contact pieces (8 — 132) of the printed circuit board assembly (8 — 3) for proper bending.

c. Connect lead wire (7 — 129) to the hot shoe by soldering.

d. Install the top cover assembly (1 — 5) on the camera body carefully so that no lead wire is held between the top cover and camera body.

Make sure that the shutter speed selector dial turns 360° and that the film advance lever can be wound up smoothly.

e. Tighten the two set screws (1 — 56).

f. Tighten the ring (1 — 57). Pay attention on the gap between the ring and camera body.

Fig. 77

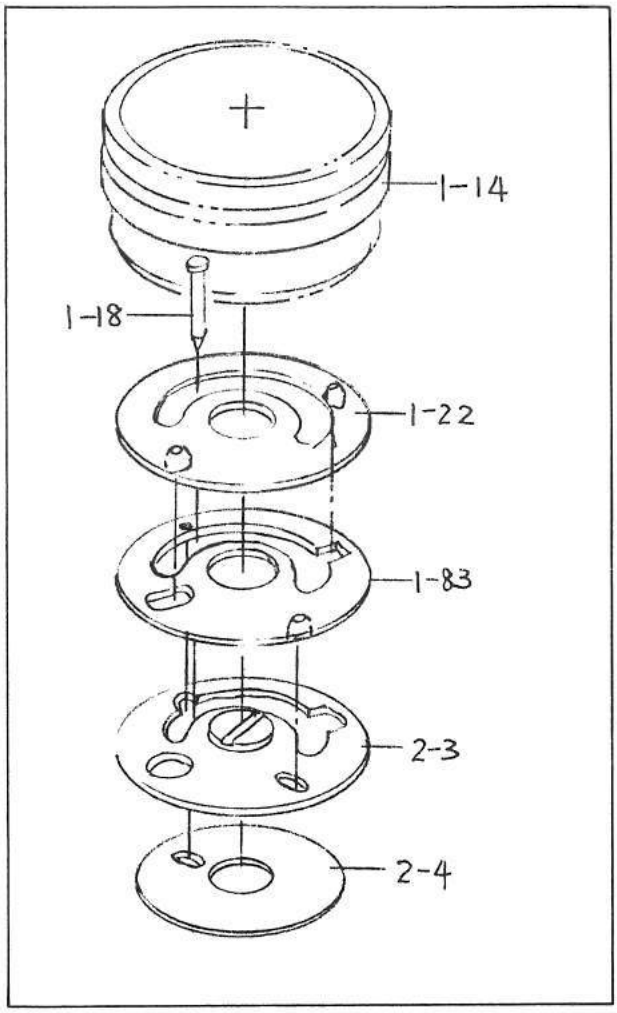

Fig. 78

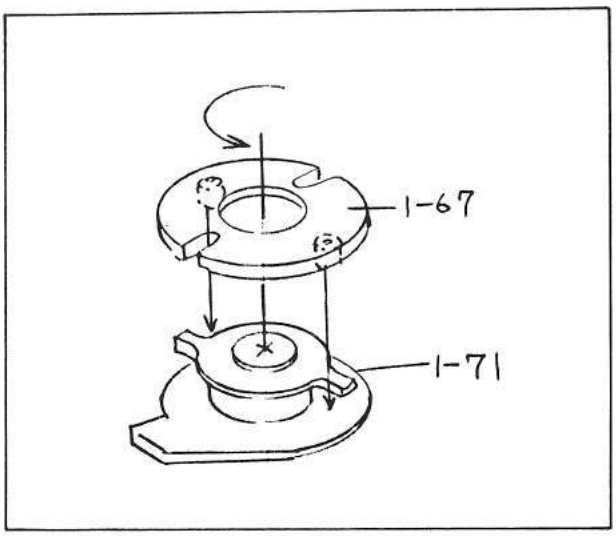

b. Remove the set screw (2 — 61), and remove the battery compartment assembly (2 — 58).

c. Remove the set screw (3 — 17).

d. Remove the set screw (2 — 22), and remove the SN switch (8 — 5) from the base plate of the exposure counter assembly.

e. Remove the set screw (3 — 6) and two set screws (3 — 16), and remove the penta prism assembly (3 — 7), photocell assembly (3 — 1) and amplifier assembly (8 — 1) all together.

NOTE: When removing the amplifier assembly (8 — 1), be careful not to damage the click spring (7 — 2).

f. Remove two set screws (3 — 8) and two set screws (3 — 15), and separate the amplifier assembly from the penta prism assembly.

3. Shutter resistor assembly (2 — 1)

a. When the lead wires (8 — 21, 8 — 20, 8 — 22, 8 — 23 and 8 — 24) are connected to the shutter resistor assembly (2 — 1), unsolder and disconnect these lead wires as described in II — 2 — a above.

b. Remove the three set screws (2 — 22) and set screw (2 — 24).

c. Move the levers (2 — 12 and 2 — 13) away from the shutter release shaft, and pull the shutter resistor assembly (2 — 1) upward. The shutter resistor assembly can then be removed.

NOTE: Be careful not to lose the coupling (2 — 27).

When reinstalling the shutter resistor assembly, be sure to set the shutter speed selector dial to "B" first. Failure from this special instruction will result bent plate (2 — 15) because of the installing position of the SM switch (8 — 4).

19. Installing film rewind knob assembly (1 – 58), bottom cover assembly (1 – 77) and film advance lever assembly (1 – 47).

19 – 1 Film rewind knob assembly (1 – 58)

Make sure that the film rewind knob clicks effectively as the leaf spring (1 – 65) operates.

19 – 2 Bottom cover assembly (1 – 77)

Install the film rewind button (1 – 81) and insulator (1 – 76), and then, install the bottom cover assembly (1 – 77).

19 – 3 Film advance lever assembly (1 – 47)

Make sure that the leaf spring (1 – 52) provides the film advance lever with a proper friction.

NOTE: When an automatic winder is mounted on the camera, the film advance lever should not turn.

Make sure that the knob (1 – 51) can be folded.

Fig. 79

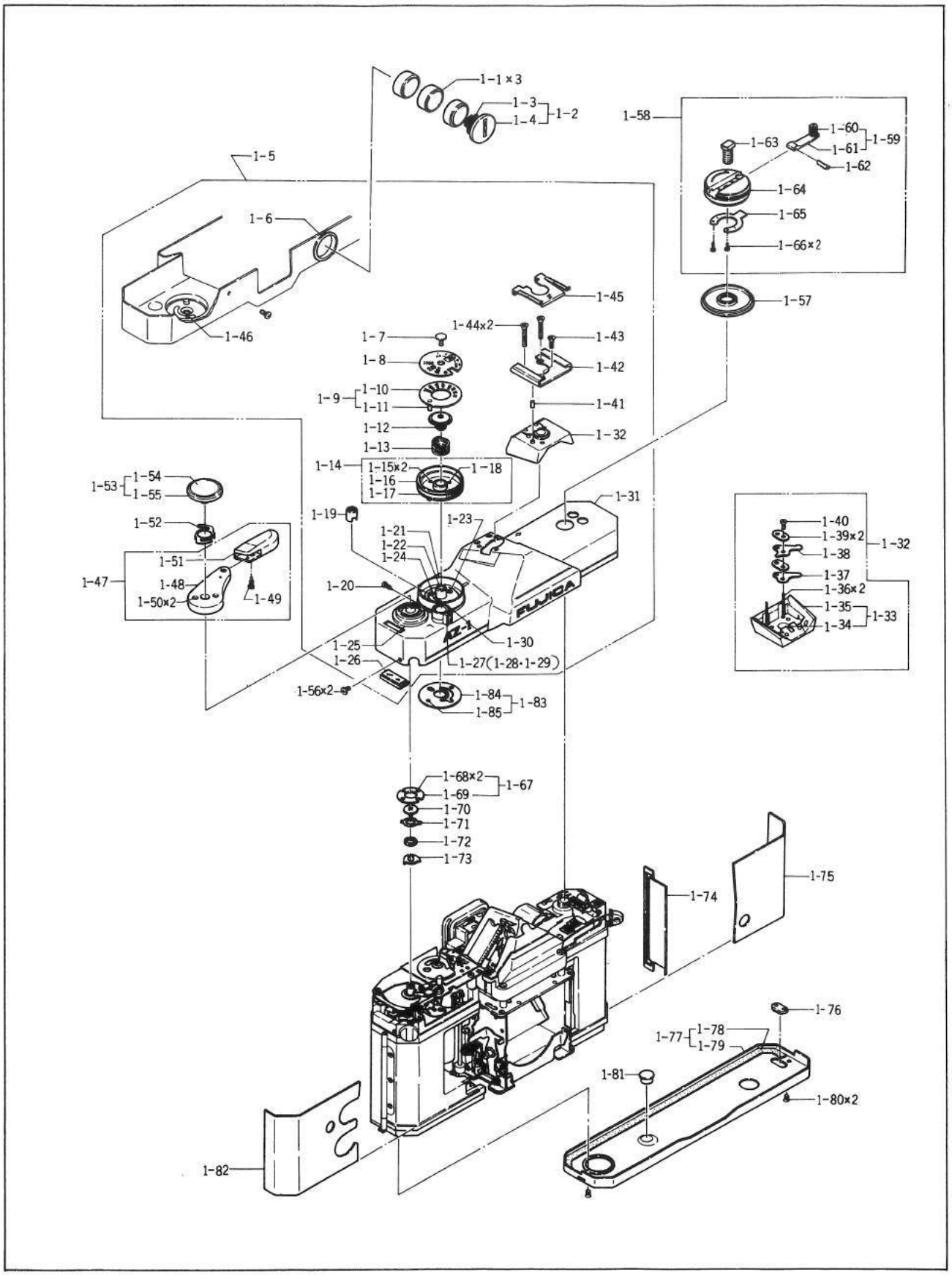
1-1×3
1-3
1-4
1-2
1-58
1-60
1-61
1-59
1-63
1-62
1-64
1-65
1-66×2
1-5
1-6
1-46
1-45
1-57
1-44×2
1-43
1-7
1-8
1-42
1-9
1-10
1-11
1-41
1-12
1-32
1-13
1-14
1-15×2
1-18
1-16
1-17
1-53
1-54
1-55
1-31
1-52
1-19
1-23
1-21
1-22
1-24
1-51
1-47
1-48
1-50×2
1-49
1-20
FUJICA
AZ-1
1-25
1-30
1-26
1-27(1-28·1-29)
1-56×2
1-84
1-83
1-85
1-40
1-39×2
1-32
1-38
1-37
1-36×2
1-35
1-33
1-34
1-68×2
1-67
1-69
1-70
1-71
1-72
1-73
1-74
1-75
1-76
1-77
1-78
1-79
1-81
1-80×2
1-82

20. Light shielding materials

Check the seal (3 — 24), moquette (4 — 37), blind (6 — 97), two blinds (7 — 22), moquette (7 — 114), moquette (7 — 121), moquette (7 — 105), moquette (7 — 104), moquette (7 — 103) and moquette (7 — 102) to insure that they are installed in their positions correctly and securely.

21. Auto — winder function

With the camera equipped with an auto - winder, film can be automatically advanced one frame by one frame.

- Auto - winder driving signal is generated by switching over the SA switch (8 — 9) and SN switch (8 — 5).
- When the SN switch (8 — 5) does not switch over correctly, LED does not work correctly and correct exposure is not provided. Repair the camera.
- When LED and exposure are normal but the auto - winder does not work, check the SA switch (8 — 9) or printed circuit board (7 — 32).
  If the auto - winder still does not work after checking the SA switch (8 — 9) or printed circuit board (7 — 32), the auto - winder is defective.

Fig. 80

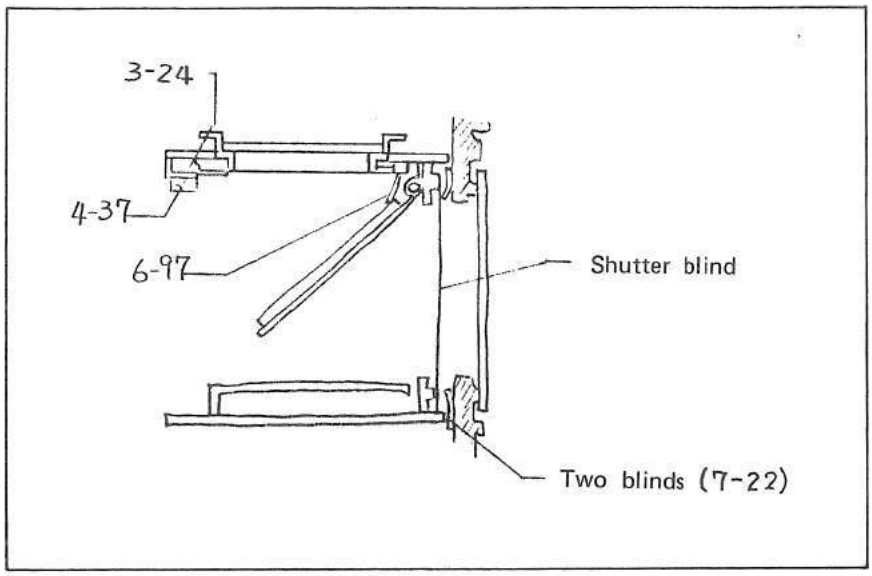

Fig. 81

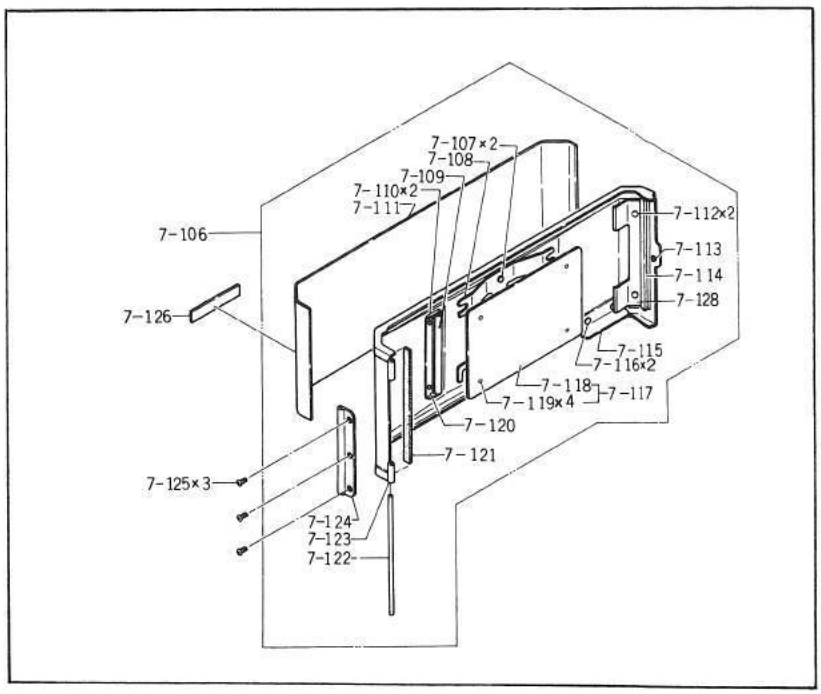

Fig. 82

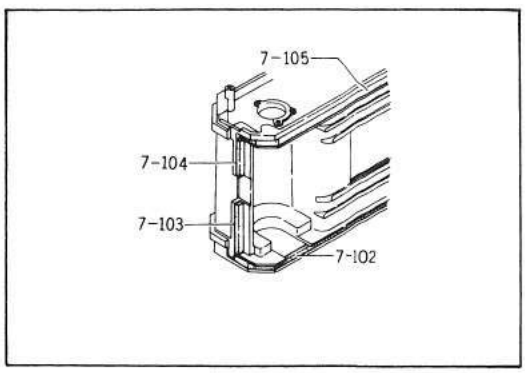

Ⅳ INSPECTION

INSPECTION POINT	METHOD OF INSPECTION	REMARKS
1. ELECTRICAL SYSTEM	Load batteries having correct voltage, and mount an F1.8/55 mm lens (full aperture metering lens).	
1 — 1 LED display	(1) With the camera set to ASA100, F5.6 and Auto, face the lens to a bright object, depress the shutter release button in a half way, and make sure that the LED lights. (2) With the LED lit, cover up the lens to darken, and make sure that the LED is locked and the display does not change. (3) With the shutter release button returned to the normal position (not depressed), insure that the LED does not light.	
1 — 2 Automatic shutter operation	(1) With the camera set to ASA100 and Auto, release the shutter, and make sure that the shutter is released smoothly. (2) When conducting exposure test, be sure to use a correct luminosity, and make sure that exposure at each aperture is within ±1 EV of the rating.	
1 — 3 Note	Exposure fluctuates when the shutter is released within 50 msec after the LED lit (example, a hammer shot).	
2. OPERATIONS OF THE PARTS FOR MAIN BODY		
2 — 1 Film advance lever	(1) Check that the film advance lever cannot be turned with the shutter release button depressed. (2) Check that the shutter release button is locked when the film advance lever is being turned. (3) Check that the film advance lever returns with a proper friction to the normal position from any posiiton of the turning stroke.	

INSPECTION POINT	METHOD OF INSPECTION	REMERKS
2 — 2 Shutter release button	(1) Check that the shutter is released correctly when the film advance lever is wound and the shutter release button can be depressed, Further, make sure that the shutter release button returns to the normal position smoothly. (2) Check that the shutter release button is securely locked when the shutter release button is turned to the locking direction. (3) Make sure that the power is turned on when the shutter release button is depressed in a half way.	
2 — 3 Self - timer	Fully set the self - timer lever after turning the film advance lever, depress the self - timer start button, and make sure that the self - timer operates, the shutter is released and that the shutter release button returns to the normal position correctly.	
2 — 4 Film rewind button	Depress the film rewind button and make sure that the sprocket is freed. Turn the film advance lever and make sure that the film rewind button resets correctly and that the sprocket operates normally.	
2 — 5 Film advancing system and back cover	Load a test film, repeatedly turn the film advance lever ten times, and make sure that the film is advanced correctly, the film advance lever returns correctly and that the film can be rewound correctly. Check the back cover to insure that it can be opened, closed and locked with the film loaded.	
3. SHUTTER 3 — 1 Operation of shutter speed selector	Make sure that the shutter speed selector clicks at each shutter speed from "B" to "B".	
3 — 2 ASA switching	Switch over ASA number from "25" to "3200" and from "3200" to "25", and make sure that ASA numbers can be switched over smoothly.	

INSPECTION POINT	METHOD OF INSPECTION	REMARKS
3 — 3 Operation of shutter	Mount a lens, set the focusing ring to the shortest distance, fully open the aperture, open the back cover, turn the film advance lever, release the shutter and make sure that the shutter operates correctly. Repeat this test three to four times at shutter speeds 1/1000, 1/60 and "B".	
4. EXPOSURE COUNTER		
4 — 1 Advancing	Close the back cover, turn the film advance lever and make sure that the exposure counter is advanced correctly. Make sure that ten frames (exposures) are advanced correctly from "S" to "8" one by one.	
4 — 2 Zero reset	When the film is advanced ten frames (up to 8), open the back cover, and check the dial to insure that it returns to "S" correctly.	
5. VIEWFINDER		
5 — 1 Coincidence of infinity	Mount a lens, set the distance scale to "inf", observe and objective in a remote place, and see if the split images are matched. A slight overage is permitted but shortage should not exist.	
5 — 2 Cross - view	Mount a lens on the camera, and make sure that no cross - view exists. Corss - view should be limited to 10 cm or less at approximately 5 meters.	
5 — 3 Vignetting in field of view	Make sure that vignetting in field of view, intrusion of a part into the field of view, or deformation of the viewfinder frame does not exist.	
5 — 4 Dust, scar and dirtiness	Make sure that no dust, scar or dirtiness which hinders field of view exists.	

INSPECTION POINT	METHOD OF INSPECTION	REMARKS
6. LENS 6 — 1 Manual stop - down	Check the lens for stop - down operation at " inf" and shortest distance. Depress the stop - down aperture button, fully open the aperture, stop down the aperture to the minimum, fully open the aperture again, and make sure that aperture changes correctly and that the click effects correctly. Any one of the diaphragm blades should not ramain in the former aperture position.	
6 — 2 Automatic stop - down	Set the aperture selector ring to the minimum, operate the shutter, and make sure that the aperture is stopped down to the minimum correctly at both "inf" and shortest distance.	
6 — 3 Delay in stop - down	Set the focusing ring to the shortest distance, set the aperture selector ring to the minimum, set shutter speed to 1/1000 sec., open the back cover, operate the shutter, and make sure that diaphragm and shutter blind are timely synchronized.	
6 — 4 Operation of helicoid	Turn the focusing ring from "inf" to the shortest distance and from the shortest distance to the "inf", and make sure that the helicoid operates smoothly and equally toward the total stroke without catching or slackness.	
6 — 5 Lens mount	Mount and dismount a lens three times, and make sure that the positioning lock operates correctly and that the lens can be mounted on the camera lightly and smoothly.	
7. APPEARANCE	a. Scar, scratch, peeled off coating, lack of balsam, discolored lens coating or thumb print should not exist on the lens. b. Scratch, damaging, gap between fitted parts or others which harm the appearance should not exist on the exterior of the camera. c. All parts should have been installed securely and correctly.	

INSPECTION POINT	METHOD OF INSPECTION	REMARKS
	d. All parts which have been installed with adhesive should not be peeled off or floated, and adhesive should have not come out from any parts. e. All engraved marks, symbols and characters whcih are to be filled with paint of appropriate color should be properly and correctly filled with the paint of the specified color.	
8. AUTO - WINDER INSTALLATION	(1) It must be possible to mount an Auto - winder for Fujica AZ - 1 on the camera correctly and securely. (2) The Auto - winder must advance film one frame by one frame as the shutter release button is depressed. (3) When the Auto - winder is operating to advance film, the film advance lever should not turn.	
9. SETTING OF PARTS AFTER COMPLETING THE INSPECTION	a. Focusing ring: "inf" b. Shutter: To be released c. Shutter speed selector: ASA 100, Auto d. Battery: Unloaded e. Exposure counter: "S" f. Self - timer: To be released g. Stop - down aperture button: Free h. Shutter release button: Free	

V

PARTS LIST

Fig. 4

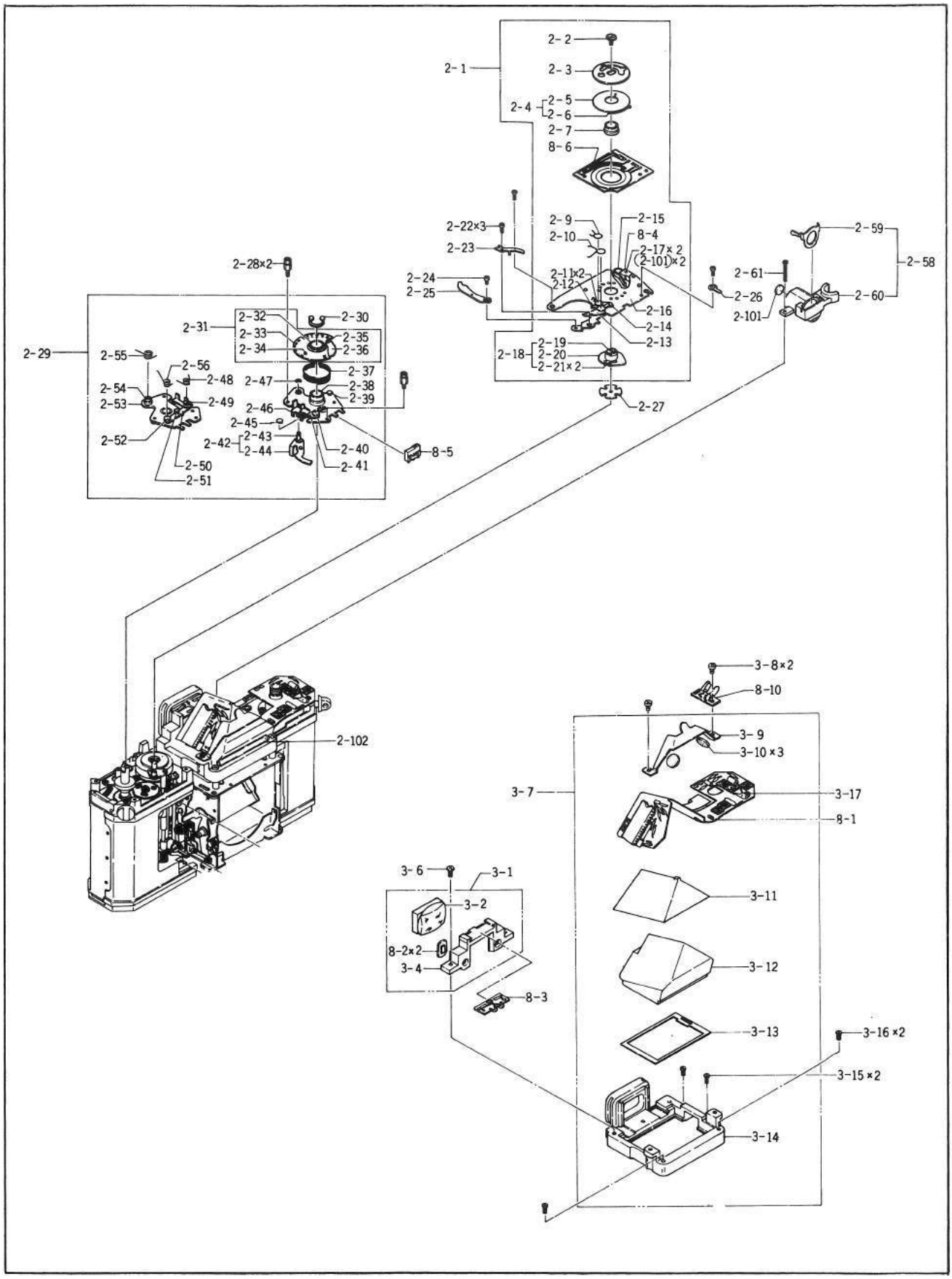
2-1
2-2
2-3
2-4
2-5
2-6
2-7
8-6
2-22×3
2-23
2-9
2-10
2-15
8-4
2-17×2
(2-101)×2
2-11×2
2-12
2-24
2-25
2-16
2-14
2-13
2-18
2-19
2-20
2-21×2
2-27
2-59
2-58
2-61
2-26
2-60
2-101
2-28×2
2-29
2-31
2-32
2-33
2-34
2-30
2-35
2-36
2-37
2-38
2-39
2-55
2-56
2-48
2-47
2-54
2-53
2-49
2-46
2-45
2-42
2-43
2-44
2-40
2-41
2-52
2-50
2-51
8-5
2-102
3-8×2
8-10
3-9
3-10×3
3-7
3-17
8-1
3-11
3-12
3-13
3-16×2
3-15×2
3-14
3-6
3-1
3-2
8-2×2
3-4
8-3

Fig. 1

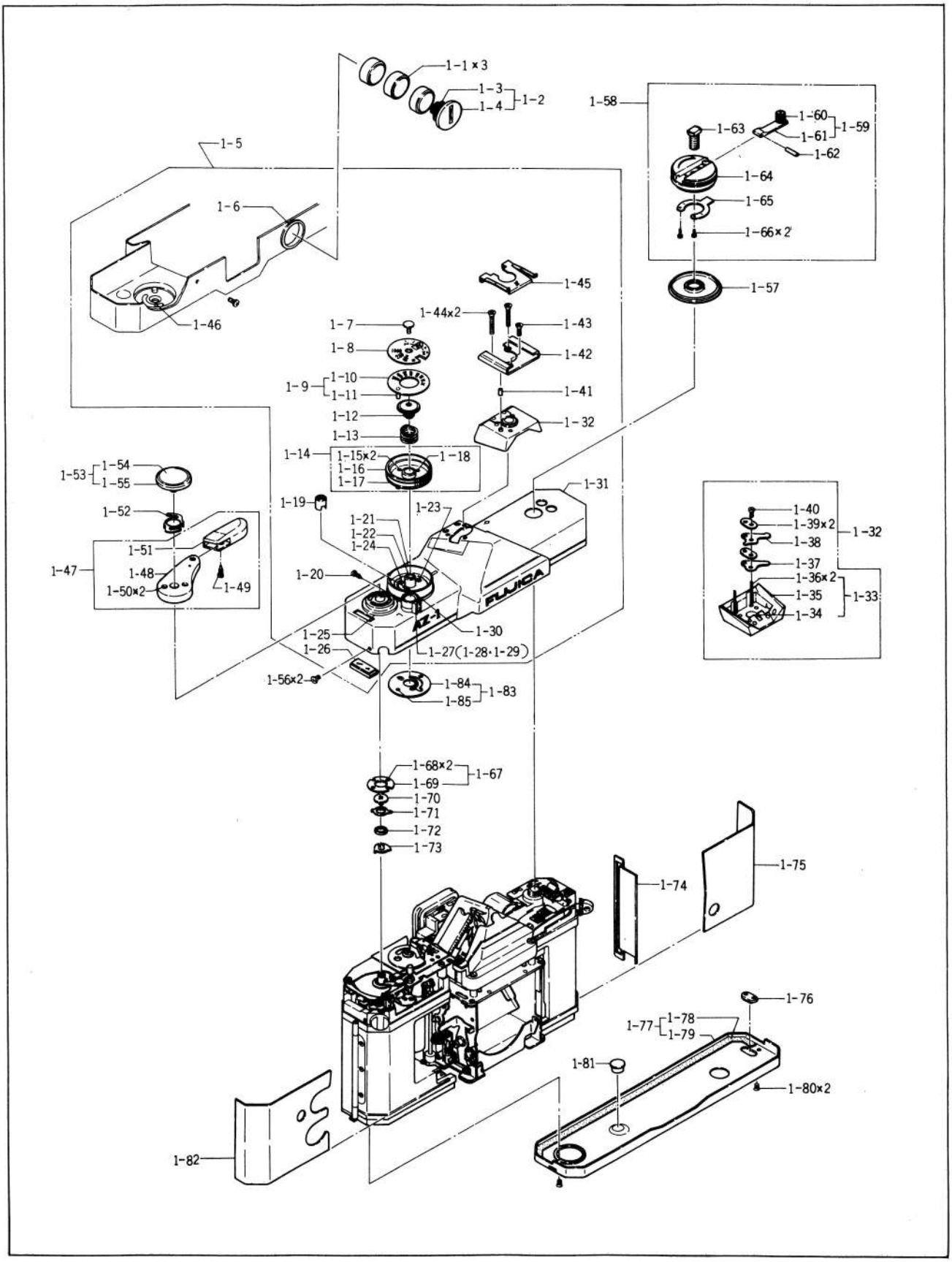
1-1 x 3
1-3
1-4
1-2
1-58
1-60
1-61
1-59
1-63
1-62
1-64
1-65
1-66 x 2
1-5
1-6
1-45
1-57
1-46
1-44x2
1-43
1-7
1-8
1-42
1-9
1-10
1-11
1-41
1-12
1-32
1-13
1-14
1-15x2
1-16
1-17
1-18
1-53
1-54
1-55
1-31
1-52
1-19
1-23
1-21
1-22
1-24
1-40
1-39x2
1-32
1-38
1-51
1-37
1-47
1-48
1-36x2
1-20
1-35
1-33
1-50x2
1-49
1-34
FUJICA
AZ-1
1-25
1-30
1-26
1-27(1-28·1-29)
1-56x2
1-84
1-83
1-85
1-68x2
1-67
1-69
1-70
1-71
1-72
1-73
1-75
1-74
1-76
1-77
1-78
1-79
1-81
1-80x2
1-82

Ref No.	Part No.	Part Name	Assembled Ref No.	Q'ty	Commonly used with	
					ST605	ST901
1 − 1	104K195780	Battery		3		
1 − 2	57A1936350	Battery chamber cover	1 − 3, 1 − 4	1		
1 − 5	303A1937100	Top cover assembly	1 − 6, 1 − 7, 1 − 8, 1 − 9, 1 − 12, 1 − 13, 1 − 14, 1 − 19, 1 − 20, 1 − 21, 1 − 22, 1 − 23, 1 − 24, 1 − 25, 1 − 26, 1 − 27, 1 − 28, 1 − 29, 1 − 30, 1 − 31, 1 − 32, 1 − 41, 1 − 42, 1 − 43, 1 − 44×2, 1 − 45, 1 − 46	1		
1 − 7	53B1940300	Set screw		1		
1 − 8	58B1940130	Shutter speed dial		1		
1 − 9	58A1438110	ASA dial assembly	1 − 10, 1 − 11	1	•	
1 − 12	29B1441100	Dial base		1	•	
1 − 13	50B122540	Spring		1	•	•
1 − 14	16A1438080	Shutter speed selector dial assembly	1 − 15×2, 1 − 16, 1 − 17, 1 − 18	1	•	
1 − 19	16B1940220	Shutter release button		1		
1 − 20	53B1940250	Screw		1		
1 − 28	50B1940260	Spring		1		
1 − 29	200M12	Steel ball		1		
1 − 32	115A1937180	Contact seat assembly	1 − 33, 1 − 37, 1 − 38 1 − 39×2, 1 − 40	1		
1 − 33	115A1937170	Contact seat	1 − 34, 1 − 35, 1 − 36×2	1		
1 − 37	112B122740	Contact piece		1	•	•
1 − 38	112B122750	Contact piece		1	•	•
1 − 39	115B122760	Insulation plate		2	•	•
1 − 40	53B93480	Set screw		1	•	•
1 − 41	17B122730	Pin		1	•	•
1 − 42	41B1940110	Hot shoe		1		
1 − 43	111M170401S	Set screw		1		

Fig. 1

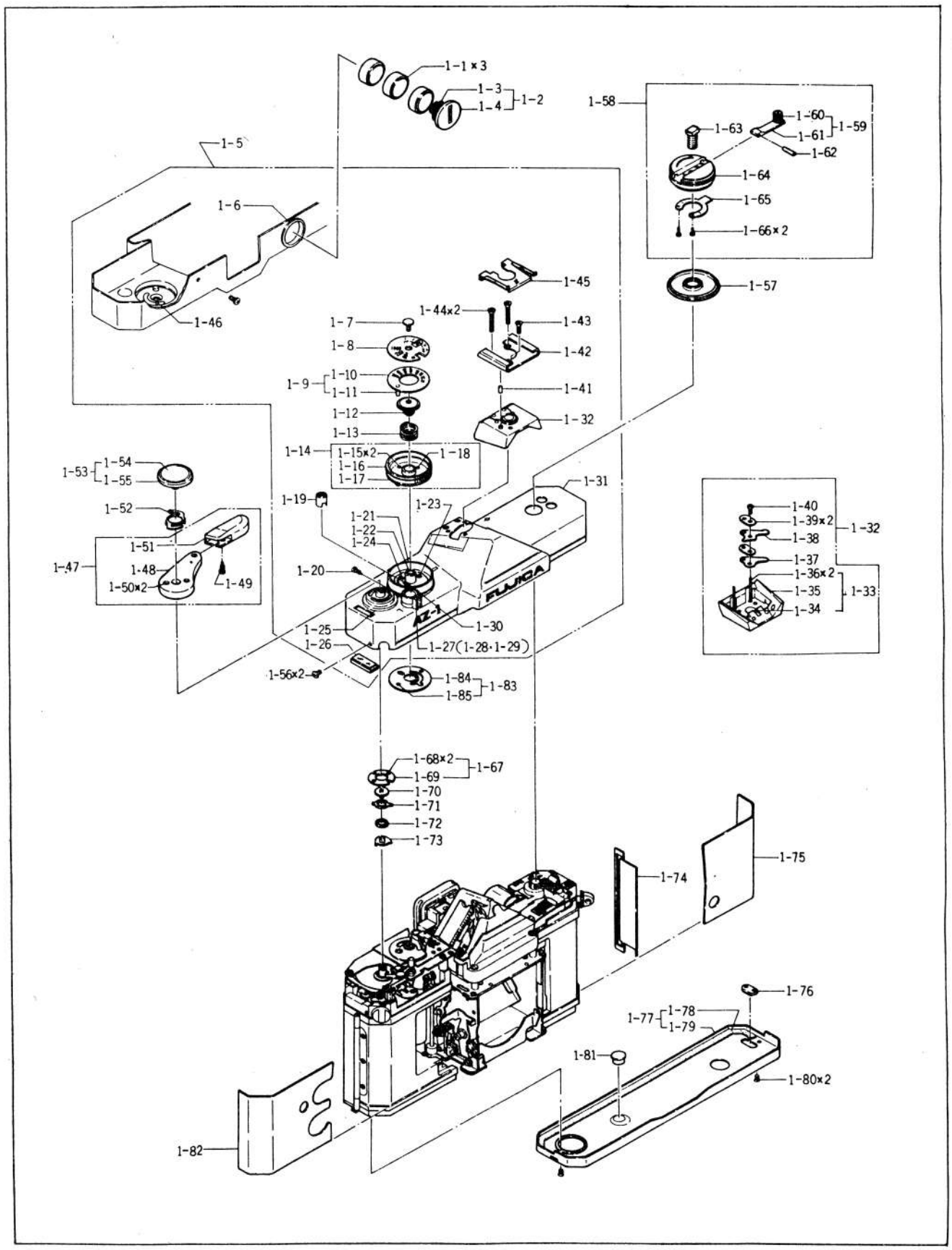
1-1×3
1-3
1-4
1-2
1-58
1-60
1-61
1-59
1-63
1-62
1-64
1-65
1-66×2
1-5
1-6
1-45
1-57
1-46
1-44×2
1-43
1-7
1-8
1-42
1-9
1-10
1-11
1-41
1-12
1-32
1-13
1-14
1-15×2
1-16
1-17
1-18
1-53
1-54
1-55
1-31
1-52
1-19
1-23
1-21
1-22
1-24
1-51
1-47
1-48
1-50×2
1-49
1-20
1-25
1-26
1-30
1-27(1-28·1-29)
1-56×2
1-84
1-85
1-83
1-40
1-39×2
1-38
1-37
1-36×2
1-35
1-34
1-33
1-68×2
1-69
1-67
1-70
1-71
1-72
1-73
1-74
1-75
1-76
1-77
1-78
1-79
1-81
1-80×2
1-82
FUJICA
AZ-1

Ref No.	Part No.	Part Name	Assembled Ref No.	Q'ty	Commonly used with	
					ST605	ST901
1 − 44	111M170801S	Set screw		2		
1 − 45	11B1940120	Hot shoe cover		1		
1 − 47	47A1937200	Film advance lever assembly	1 − 48, 1 − 49, 1 − 50×2, 1 − 51	1		
1 − 52	50B1000200	Leaf spring		1		
1 − 53	53A1937150	Screw assembly	1 − 54, 1 − 55	1		
1 − 56	110M170301C	Set screw		2		
1 − 57	23B1440300	Ring		1	•	
1 − 58	16A1443070	Film rewind knob assembly	1 − 59, 1 − 62, 1 − 63, 1 − 64, 1 − 65, 1 − 66×2	1	ST705	
1 − 59	18A1253630	Film rewind crank assembly	1 − 60, 1 − 61	1	•	
1 − 67	85A980130	Coupler assembly	1 − 68×2, 1 − 69	1		
1 − 70	53B93670	Set screw		1		
1 − 71	85B1939090	Square hole plate		1		
1 − 72	55B1939080	Washer		1		
1 − 73	85B1440060	Square hole plate		1	•	
1 − 74	19B96150	Cover		1	•	•
1 − 75	59B1440350	Leather		1	•	
1 − 76	115B1939670	Insulator		1		
1 − 77	11A1936110	Bottom cover assembly	1 − 78, 1 − 79	1		
1 − 80	111M170301G	Set screw		2		
1 − 81	16B1939070	Film rewind bottom		1		
1 − 82	59B1440360	Leather		1	•	
1 − 83	85A1437140	Coupler assembly		1		

Fig. 2

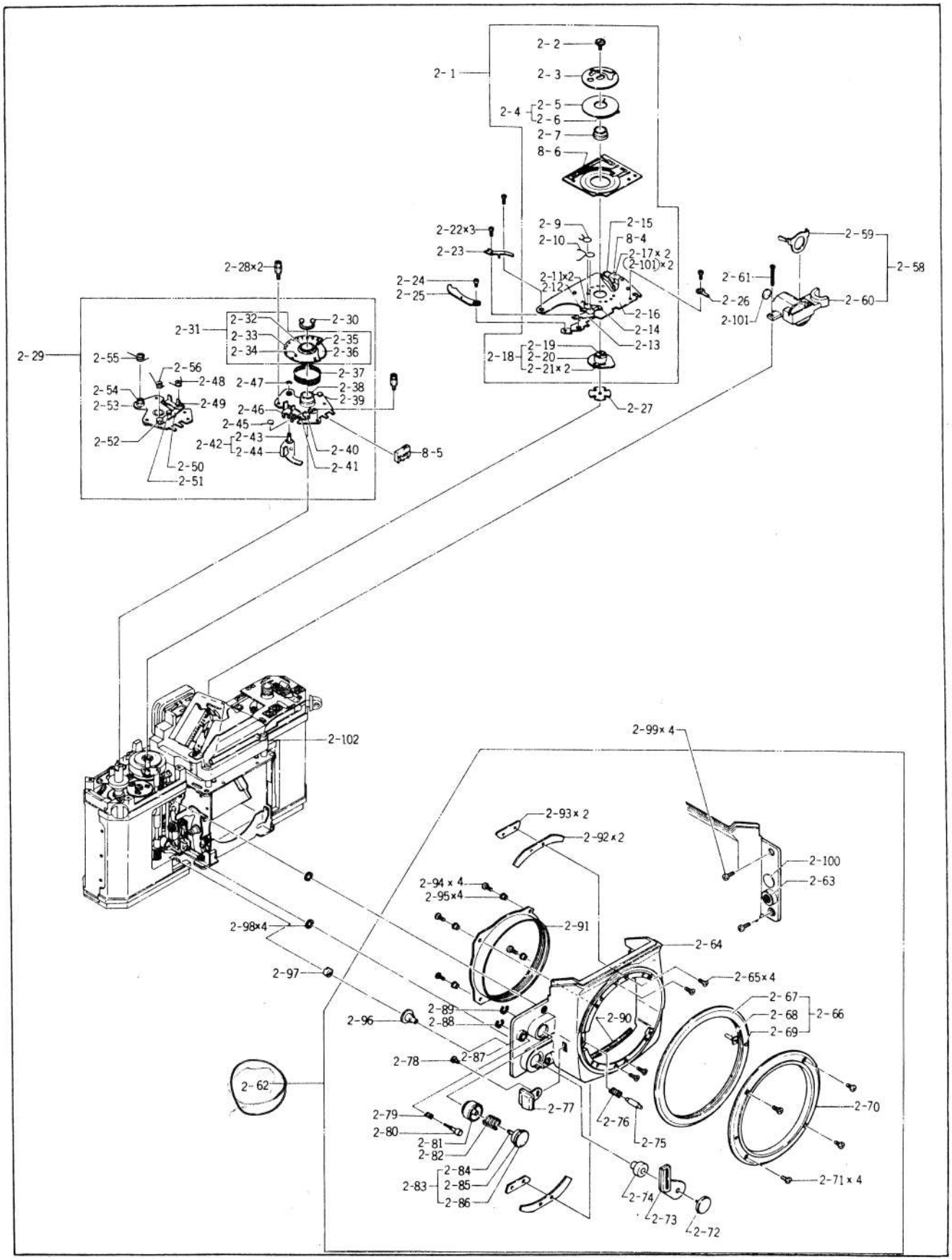
2-1
2-2
2-3
2-4
2-5
2-6
2-7
8-6
2-9
2-10
2-15
8-4
2-17×2
(2-101)×2
2-22×3
2-23
2-24
2-25
2-11×2
2-12
2-16
2-14
2-13
2-18
2-19
2-20
2-21×2
2-27
2-28×2
2-29
2-31
2-32
2-33
2-34
2-30
2-35
2-36
2-37
2-38
2-39
2-47
2-46
2-45
2-42
2-43
2-44
2-40
2-41
8-5
2-55
2-56
2-48
2-54
2-53
2-49
2-52
2-50
2-51
2-59
2-58
2-61
2-26
2-60
2-101
2-102
2-99×4
2-93×2
2-92×2
2-100
2-63
2-94×4
2-95×4
2-91
2-98×4
2-64
2-97
2-65×4
2-67
2-68
2-69
2-66
2-89
2-88
2-90
2-96
2-78
2-87
2-62
2-77
2-70
2-79
2-80
2-81
2-82
2-76
2-75
2-84
2-83
2-85
2-86
2-74
2-73
2-72
2-71×4

Ref No.	Part No.	Part Name	Assembled Ref No.	Q'ty	Commonly used with ST605	Commonly used with ST901
2 — 1	305A1938000	Shutter resistor assembly	2 — 2, 2 — 3, 2 — 4, 2 — 7, 8 — 6, 2 — 9, 2 — 10, 2 — 11×2, 2 — 12, 2 — 13, 2 — 14, 2 — 15, 8 — 4, 2 — 17×2, 2 — 18, 2 — 101×2	1		
2 — 2	53B1442010	Spindle		1	•	
2 — 3	85B1442000	Coupler		1	•	
2 — 4	82A1938050	Contact plate assembly	2 — 5, 2 — 6	1		
2 — 7	32B1441970	Sleeve		1	•	
2 — 9	50B1441900	Spring		1	•	
2 — 10	50B1941060	Spring		1		
2 — 18	85A1938040	Click plate assembly	2 — 19, 2 — 20, 2 — 21×2	1		
2 — 22	110M170301S	Set screw		3		
2 — 23	50B1939330	Leaf spring		1		
2 — 24	110M140201S	Set screw		1	•	
2 — 25	65B1440120	Index plate		1	•	
2 — 27	33B1440110	Coupling		1	•	
2 — 28	32B1440130	Column		2	•	
2 — 29	322A1937600	Exposure counter assembly	2 — 30, 2 — 31, 2 — 37, 2 — 38, 2 — 39, 2 — 40, 2 — 41, 2 — 42, 2 — 45, 2 — 46, 2 — 47, 2 — 48, 2 — 49, 2 — 50, 2 — 51, 2 — 52, 2 — 53, 2 — 54, 2 — 55, 2 — 56	1		
2 — 58	12A1936140	Battery compartment assembly	2 — 59, 2 — 60, 2 — 101,	1		
2 — 61	110M170953S	Set screw		1		
2 — 62	304A1937000	Lens mount assembly	2 — 63, 2 — 64, 2 — 65×4, 2 — 66, 2 — 70, 2 — 71×4,	1		

Fig. 2

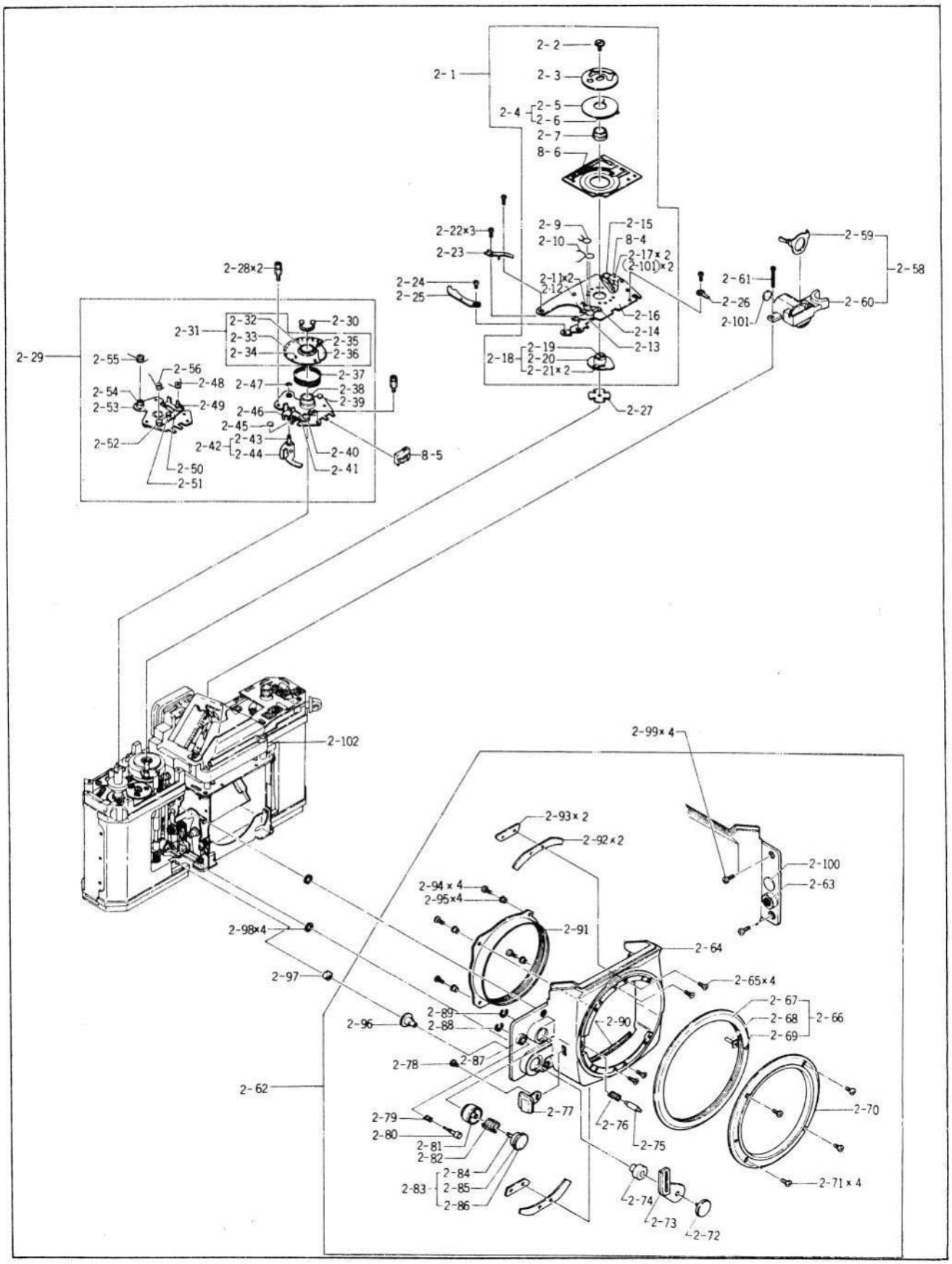
2-1
2-2
2-3
2-4
2-5
2-6
2-7
8-6
2-9
2-10
2-15
8-4
2-17×2
(2-101)×2
2-22×3
2-23
2-24
2-25
2-11×2
2-12
2-16
2-14
2-13
2-18
2-19
2-20
2-21×2
2-27
2-59
2-58
2-61
2-26
2-60
2-101
2-28×2
2-29
2-31
2-32
2-30
2-33
2-35
2-34
2-36
2-37
2-55
2-56
2-48
2-47
2-38
2-39
2-54
2-53
2-49
2-46
2-45
2-52
2-42
2-43
2-44
2-40
2-41
8-5
2-50
2-51
2-102
2-99×4
2-93×2
2-92×2
2-100
2-63
2-94×4
2-95×4
2-91
2-98×4
2-64
2-97
2-65×4
2-67
2-68
2-66
2-69
2-89
2-88
2-96
2-90
2-78
2-87
2-62
2-77
2-70
2-79
2-80
2-76
2-75
2-81
2-82
2-84
2-83
2-85
2-86
2-71×4
2-74
2-73
2-72

Ref No.	Part No.	Part Name	Assembled Ref No.	Q'ty	Commonly used with ST605	Commonly used with ST901
			2 − 72, 2 − 73, 2 − 74, 2 − 75, 2 − 76, 2 − 77, 2 − 78, 2 − 79, 2 − 80, 2 − 81, 2 − 82, 2 − 83, 2 − 87, 2 − 88, 2 − 89, 2 − 90, 2 − 91, 2 − 92×2, 2 − 93×2, 2 − 94×4, 2 − 95×4, 2 − 96			
2 − 65	111M170301S	Screw		4		
2 − 66	23A1937010	Aperture transmission ring assembly	2 − 67, 2 − 68, 2 − 69	1		
2 − 70	23B123020	Lens mount ring		1		•
2 − 71	110M170281C	Screw		4	•	•
2 − 72	53B384510	Set screw		1	•	•
2 − 73	47A374530	Self - timer lever assembly		1	•	•
2 − 74	32B95420	Shaft holder		1		•
2 − 75	17B123190	Positioning pin		1		•
2 − 76	50B123200	Spring		1		•
2 − 77	16A123940	Lock release button assembly		1		•
2 − 78	53B123180	Screw		1		•
2 − 79	50B95230	Spring		1	•	•
2 − 80	16B95220	Button holder		1	•	•
2 − 81	31B1440940	Shaft holder		1		
2 − 82	50B95250	Spring		1	•	•
2 − 83	16A1437950	Stopped - down aperture button	2 − 84, 2 − 85, 2 − 86	1	•	
2 − 88	191M08	E - clip		1		
2 − 89	191M15	E - clip		1		
2 − 90	27B123380	Moquette		1	•	•
2 − 91	23B123030	P - mount ring		1		•

Fig. 2

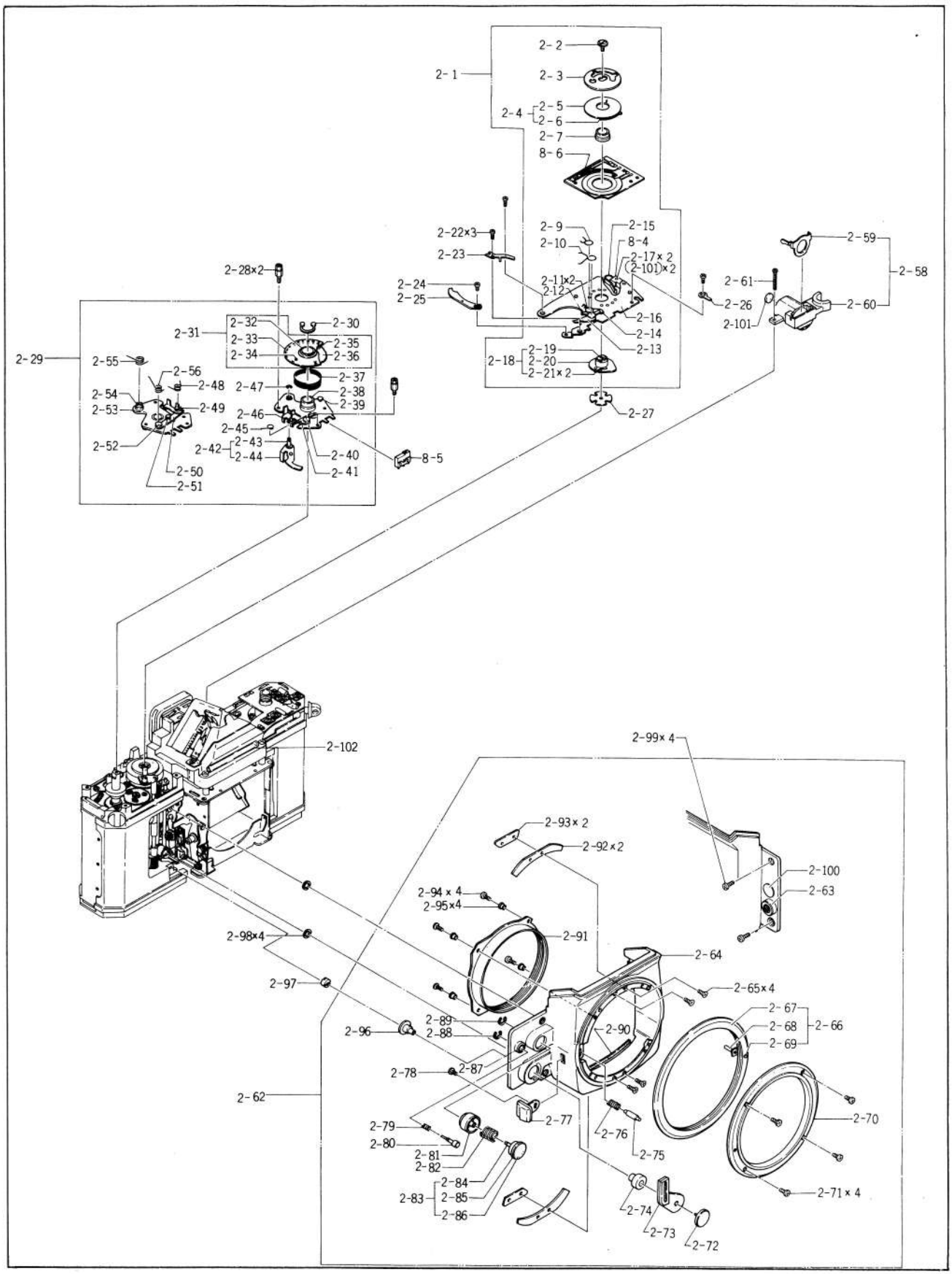
2-1
2-2
2-3
2-4
2-5
2-6
2-7
8-6
2-22×3
2-23
2-9
2-10
2-15
8-4
2-17×2
(2-101)×2
2-11×2
2-12
2-16
2-14
2-13
2-24
2-25
2-18
2-19
2-20
2-21×2
2-27
2-59
2-58
2-61
2-26
2-60
2-101
2-28×2
2-29
2-31
2-32
2-33
2-34
2-30
2-35
2-36
2-37
2-38
2-39
2-55
2-56
2-48
2-47
2-54
2-53
2-49
2-46
2-45
2-43
2-42
2-44
2-40
2-41
8-5
2-52
2-50
2-51
2-102
2-99×4
2-93×2
2-92×2
2-100
2-63
2-94×4
2-95×4
2-91
2-98×4
2-64
2-97
2-65×4
2-67
2-68
2-66
2-69
2-89
2-88
2-96
2-90
2-78
2-87
2-62
2-77
2-70
2-79
2-80
2-76
2-81
2-82
2-75
2-84
2-83
2-85
2-86
2-71×4
2-74
2-73
2-72

Ref No.	Part No.	Part Name	Assembled Ref No.	Q'ty	Commonly used with	
					ST605	ST901
2 — 92	50B123050	Plate		2		•
2 — 93	85B123060	Plate		2		•
2 — 94	53B123320	Set screw		4		•
2 — 95 - 1	42B123330	Bushing S1		0~4		•
2 — 95 - 2	42B123400	Bushing S2		0~4		•
2 — 95 - 3	42B123410	Bushing S3		0~4		•
2 — 96	32B95300	Shaft		1	•	•
2 — 97	33B95370	Coupling		1	•	•
2 — 98 - 1	55B95280	Washer S1 (t=0.02)		0~	•	•
2 — 98 - 2	169M23005	Washer S2 (t=0.05)		0~	•	•
2 — 98 - 3	55B95390	Washer S3 (t=0.03)		0~	•	•
2 — 99	110M200401S	Set screw		4		
2 — 100	55B1253910	Washer		1	•	
2 — 101	58B1440370	Label		1	•	

4. Exposure counter assembly (2 – 29)

a. Remove the set screw (1 — 70), and remove the square hole plate (1 — 71), washer (1 — 72) and square hole plate (1 — 73).

b. Turn the column (2 — 28) counterclockwise, and remove it.

c. Remove the exposure counter assembly (2 — 29) upward.

Fig. 3

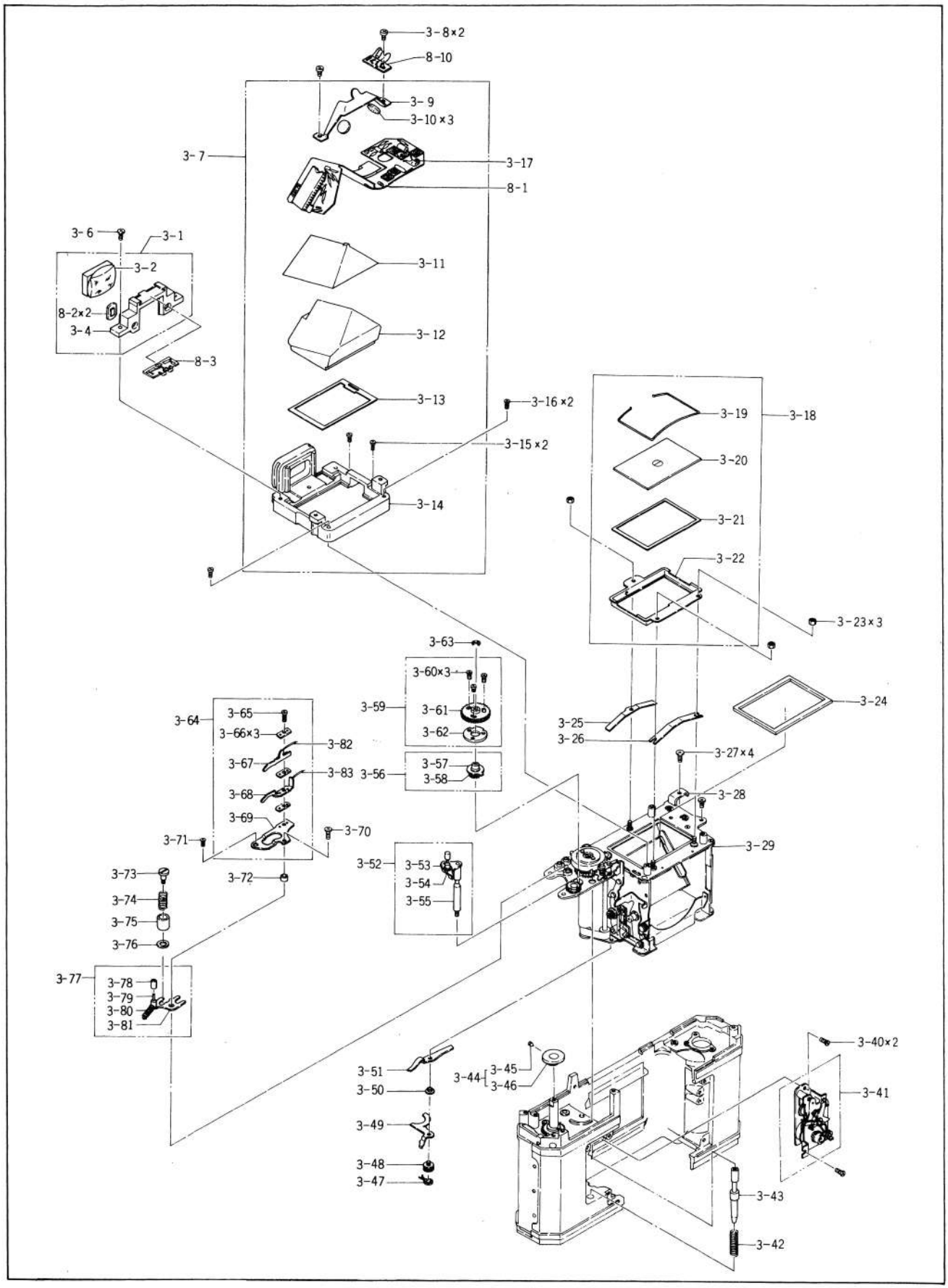
3-8×2
8-10
3-9
3-10×3
3-7
3-17
8-1
3-6
3-1
3-2
3-11
8-2×2
3-4
3-12
8-3
3-13
3-16×2
3-19
3-18
3-15×2
3-20
3-14
3-21
3-22
3-23×3
3-63
3-60×3
3-24
3-59
3-61
3-64
3-65
3-25
3-62
3-66×3
3-26
3-82
3-27×4
3-67
3-83
3-56
3-57
3-58
3-28
3-68
3-69
3-29
3-71
3-70
3-52
3-53
3-73
3-72
3-54
3-74
3-55
3-75
3-76
3-77
3-78
3-79
3-80
3-81
3-40×2
3-51
3-44
3-45
3-46
3-41
3-50
3-49
3-48
3-47
3-43
3-42

Ref No.	Part No.	Part Name	Assembled Ref No.	Q'ty	Commonly used with ST605	ST901
3— 1	316A1437160	Photocell assembly	3—2, 8—2×2, 3—4,	1	•	
3— 2	1A146110	Eyepiece lens		1	•	
3— 7	12A1938100	Penta prism assembly	3—8×2, 3—9, 3—10×3, 3—11, 3—12, 3—13, 3—14	1		
3— 8	113M170403S	Set screw		2		
3— 9	56B1941110	Prism holder		1		
3—10	59B1941120	Moquette		3		
3—11	11B1941140	Cover		1		
3—12	SF48L 2B1589240	Prism		1	ST705	
3—13	20A1938150	Frame assembly		1		
3—14	12B1941160	Prism case		1		
3—15	110M140351S	Set screw		2		
3—16	110M170451S	Set screw		2		
3—17	110M170303N	Set screw		1		
3—18	12A1437170	Focusing screen assembly		1	•	
3—23	54B1440210	Nut		3	•	
3—24	95B1442930	Moquette		1	•	
3—25	50B1440200	Leaf spring		1	•	
3—26	50B1440190	Lead spring		1	•	
3—27	110M200301S	Set screw		4		
3—28	85B99720	Bracket		1	•	•
3—29	305A1937800	Focal plane shutter	4—1, 4—2, 4—5, 4—6, 4—7, 4—8, 4—11, 4—15, 4—16, 4—17, 4—18, 4—19, 4—20, 4—24, 4—25, 4—26, 4—27, 4—28×2, 4—29×2, 4—30×2, 4—31×4, 4—32, 4—82, 4—83, 6—1, 5—1, 5—51×4	1		

Fig. 3

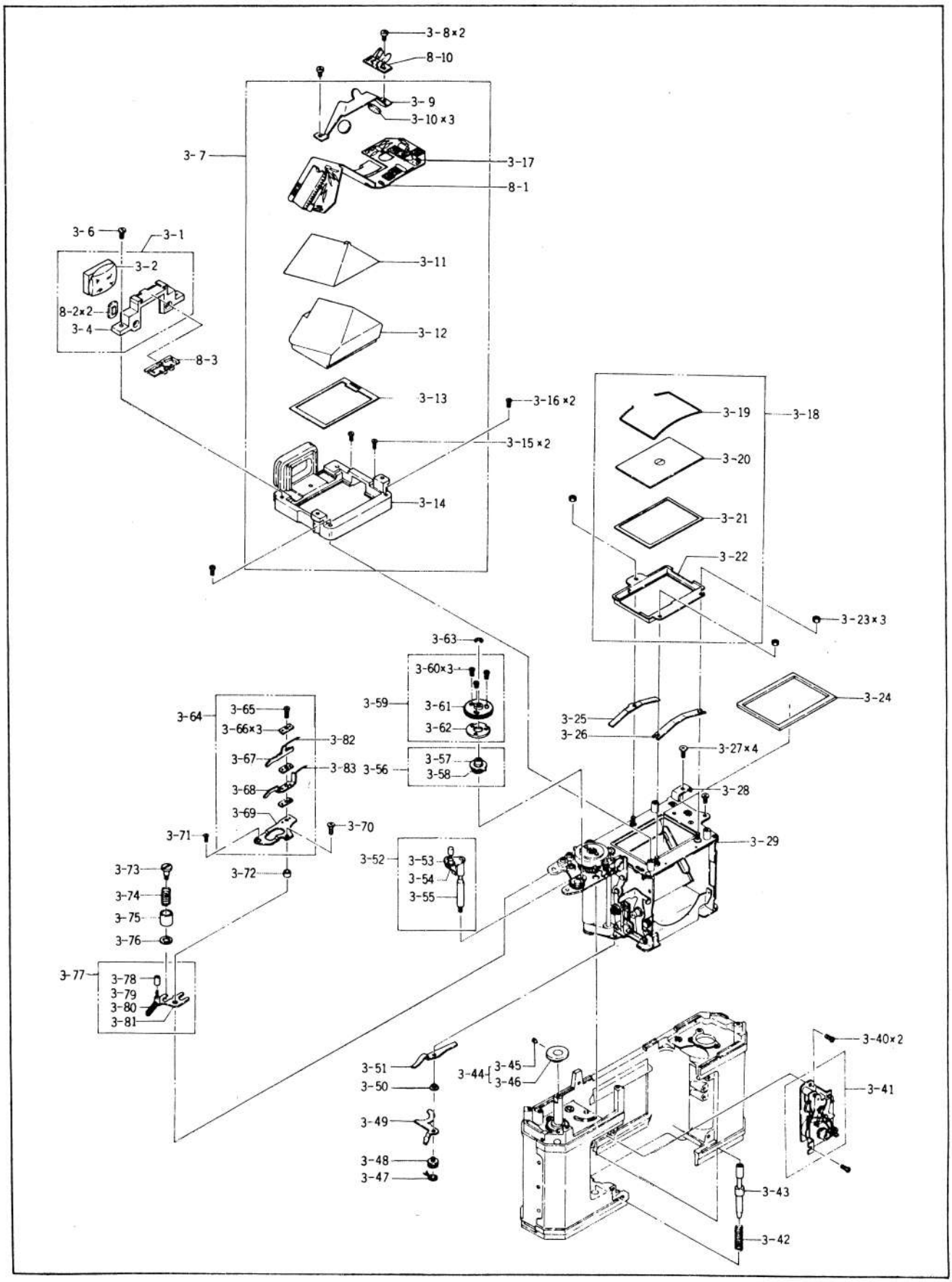
3-8×2
8-10
3-9
3-10×3
3-7
3-17
8-1
3-6
3-1
3-2
8-2×2
3-4
8-3
3-11
3-12
3-13
3-16×2
3-15×2
3-14
3-19
3-18
3-20
3-21
3-22
3-23×3
3-63
3-60×3
3-59
3-61
3-62
3-24
3-25
3-26
3-27×4
3-28
3-64
3-65
3-66×3
3-82
3-67
3-83
3-56
3-57
3-58
3-68
3-69
3-71
3-70
3-29
3-52
3-53
3-54
3-55
3-73
3-72
3-74
3-75
3-76
3-77
3-78
3-79
3-80
3-81
3-40×2
3-51
3-44
3-45
3-46
3-41
3-50
3-49
3-48
3-47
3-43
3-42

Ref No.	Part No.	Part Name	Assembled Ref No.	Q'ty	Commonly used with	
					ST605	ST901
3 — 40	110M200301S	Set screw		2		
3 — 41	307A103450	Self - timer assembly		1	•	•
3 — 42	50B1939340	Spring		1		
3 — 43	32B1939290	Lower shutter release shaft		1		
3 —						
3 — 44	35A370100	Eccentric cam assembly	3 — 45, 3 — 46	1		•
3 — 47	50B94840	Spring		1	•	
3 — 48	53B94830	Screw		1	•	
3 — 49	47B94850	Brake lever		1	•	
3 — 50	32B94820	Sleeve		1	•	
3 — 51	47B94810	Mirror start lever		1	•	
3 — 52	32A1936120	Shutter release shaft assembly	3 — 53, 3 — 54, 3 — 55	1		
3 — 56	34A374240	Spur gear assembly	3 — 57, 3 — 58	1		
3 — 59	34A1936130	Clutch disc assembly	3 — 60×3, 3 — 61, 3 — 62	1		
3 — 63	191M12	E - clip		1		
3 — 64	46A103320	Synchro - contact plate assembly	3 — 65, 3 — 66×3, 3 — 67, 3 — 68, 3 — 69	1	•	•
3 — 65	110M140451S	Set screw		1		
3 — 66	115B99680	Insulator		3	•	•
3 — 67	109B99700	Contact plate		1	•	•
3 — 68	109B99690	Contact plate		1	•	•
3 — 69	46B99670	Contact base plate		1	•	•
3 — 70	110M170501S	Set screw		1		
3 — 71	111M170301S	Set screw		1		
3 — 72	42B99710	Collar		1	•	•
3 — 73	53B99180	Screw		1	•	•
3 — 74	50B99170	Spring		1	•	•
3 — 75	42B99150	Insulation collar		1	•	•
3 — 76	55B91160	Washer		1	•	•

Fig. 3

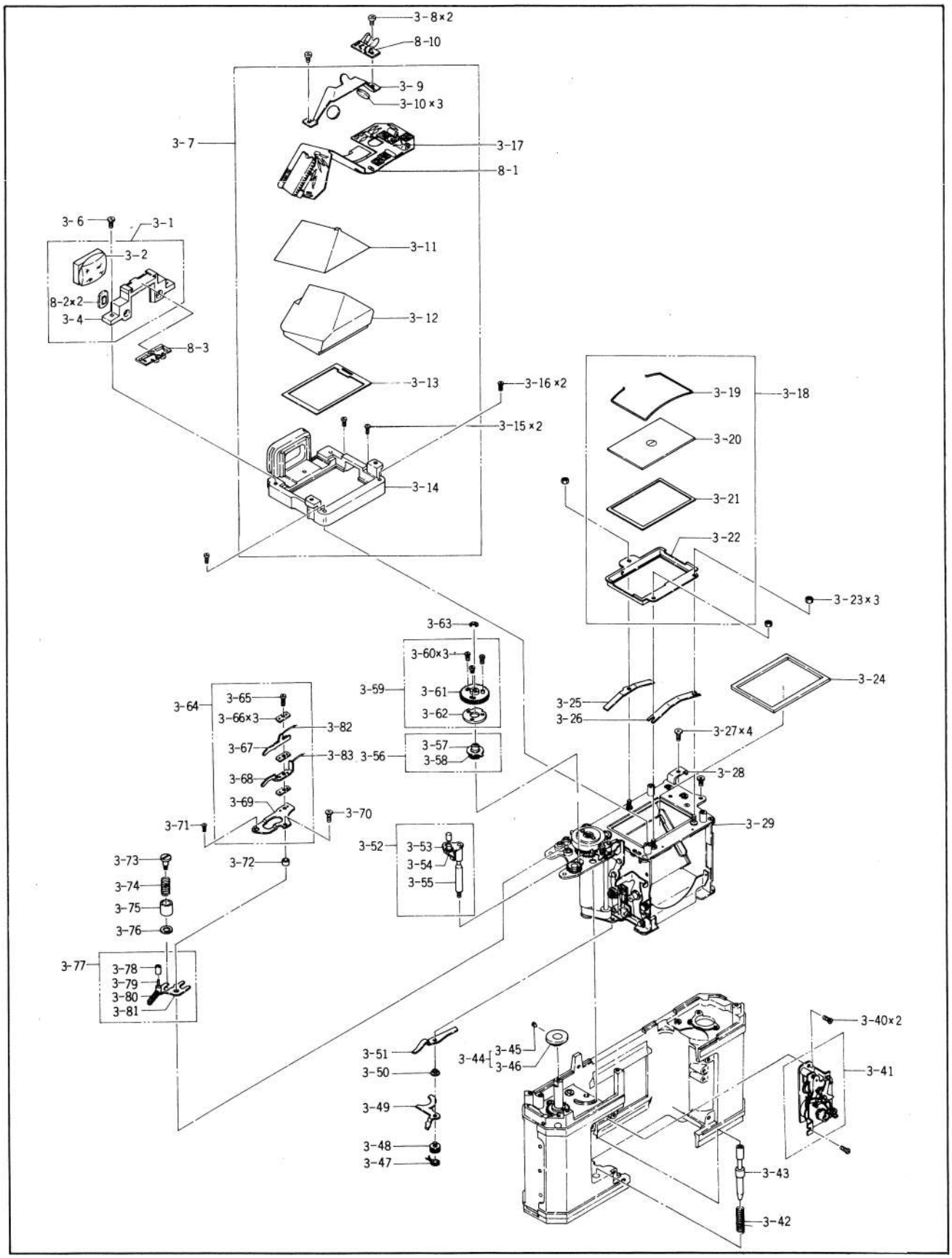
3-8×2
8-10
3-9
3-10×3
3-7
3-17
8-1
3-6
3-1
3-2
8-2×2
3-4
8-3
3-11
3-12
3-13
3-16×2
3-15×2
3-14
3-19
3-18
3-20
3-21
3-22
3-23×3
3-63
3-60×3
3-59
3-61
3-62
3-24
3-25
3-26
3-27×4
3-64
3-65
3-66×3
3-82
3-67
3-83
3-56
3-57
3-58
3-68
3-69
3-70
3-71
3-28
3-29
3-52
3-53
3-54
3-55
3-72
3-73
3-74
3-75
3-76
3-77
3-78
3-79
3-80
3-81
3-40×2
3-51
3-44
3-45
3-46
3-41
3-50
3-49
3-48
3-47
3-43
3-42

Ref No.	Part No.	Part Name	Assembled Ref No.	Q'ty	Commonly used with	
					ST605	ST901
3 — 77	87A103180	Stopper plate assembly	3 — 78, 3 — 79, 3 — 80, 3 — 81	1	•	•
3 — 82	110B1564740	Lead wire $12/0.12^{TA}$ 0.15^{t} ℓ=135		1		
3 — 83	110B15646740	Lead wire $12/0.12^{TA}$ 0.15^{t} ℓ=35		1		

Fig. 4

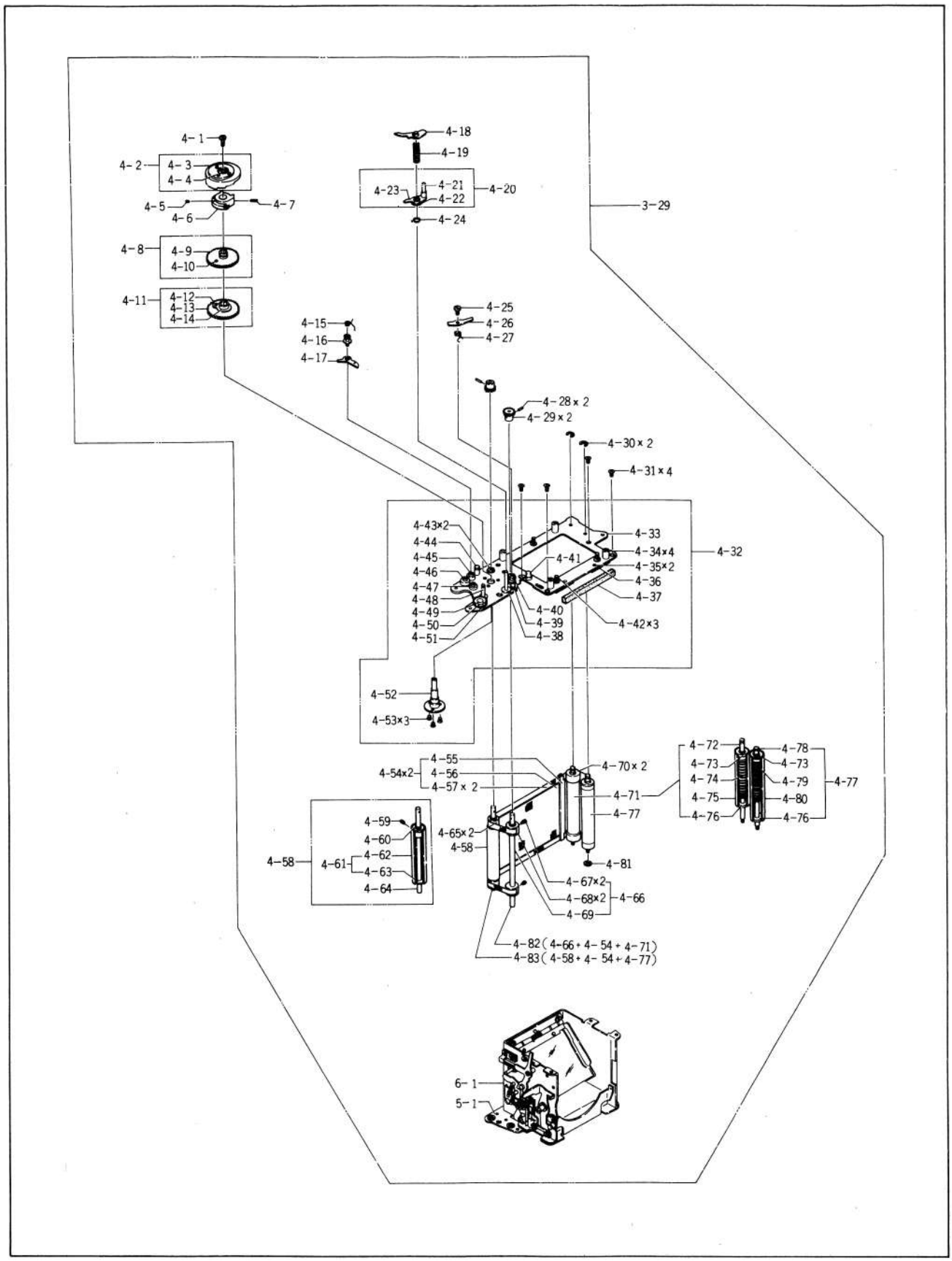
4-1
4-2
4-3
4-4
4-5
4-6
4-7
4-8
4-9
4-10
4-11
4-12
4-13
4-14
4-15
4-16
4-17
4-18
4-19
4-20
4-21
4-22
4-23
4-24
4-25
4-26
4-27
4-28 x 2
4-29 x 2
4-30 x 2
4-31 x 4
3-29
4-32
4-33
4-34x4
4-35x2
4-36
4-37
4-38
4-39
4-40
4-41
4-42x3
4-43x2
4-44
4-45
4-46
4-47
4-48
4-49
4-50
4-51
4-52
4-53x3
4-54x2
4-55
4-56
4-57 x 2
4-58
4-59
4-60
4-61
4-62
4-63
4-64
4-65x2
4-66
4-67x2
4-68x2
4-69
4-70 x 2
4-71
4-72
4-73
4-74
4-75
4-76
4-77
4-78
4-79
4-80
4-81
4-82 (4-66 + 4-54 + 4-71)
4-83 (4-58 + 4-54 + 4-77)
6-1
5-1

Ref No.	Part No.	Part Name	Assembled Ref No.	Q'ty	Commonly used with ST605	Commonly used with ST901
4 — 1	53B93480	Screw		1	●	●
4 — 2	35A1937820	Cam assembly	4 — 3, 4 — 4	1		
4 — 5	53B1940880	Set screw		1		
4 — 6	35B1940800	Cam		1		
4 — 7	53B1940890	Set screw		1		
4— 8 - 1	34A1937850	1st gear assembly S1	4 — 9, 4 — 10	0~1		
4 — 8 - 2	34A1937860	1st gear assembly S2	4 — 9, 4 — 10	0~1		
4 — 8 - 3	34A1937870	1st gear assembly S3	4 — 9, 4 — 10	0~1		
4 — 11 - 1	34A103460	2nd gear assembly S1	4 — 12, 4 — 13, 4 — 14	0~1	●	●
4 — 11 - 2	34A103470	2nd gear assembly S2	4 — 12, 4 — 13, 4 — 14	0~1	●	●
4 — 11 - 3	34A103480	2nd gear assembly S3	4 — 12, 4 — 13, 4 — 14	0~1	●	●
4 — 15	50B1940900	Spring		1		
4 — 16	53B99090	Screw		1	●	●
4 — 17	47B99080	Lever		1	●	●
4 — 18	47B1940810	Kick lever		1		
4 — 19	50B98980	Spring		1	●	●
4 — 20	47A1937840	Stop lever assembly	4 — 21, 4 — 22, 4 — 23	1		
4 — 24	50B98970	Spring		1	●	●
4 — 25	53B99050	Set screw		1	●	●
4 — 26	45B99030	Claw		1	●	●
4 — 27	50B99040	Spring		1	●	●
4 — 28	17B99380	Spring pin		2	●	●
4 — 29	34B126560	Gear		2	●	●
4 — 30	191M15	E - clip		2		
4 — 31	111M170221S	Set screw		4		
4 — 32	46A1938200	Shutter base plate assembly	4 — 33, 4 — 34×4, 4 — 35×2, 4 — 36, 4 — 37, 4 — 38, 4 — 39, 4 — 40, 4 — 41, 4 — 42×3, 4 — 43×2, 4 — 44, 4 — 45, 4 — 46, 4 — 47, 4 — 48, 4 — 49, 4 — 50, 4 — 51, 4 — 52, 4 — 53×3			

Fig. 4

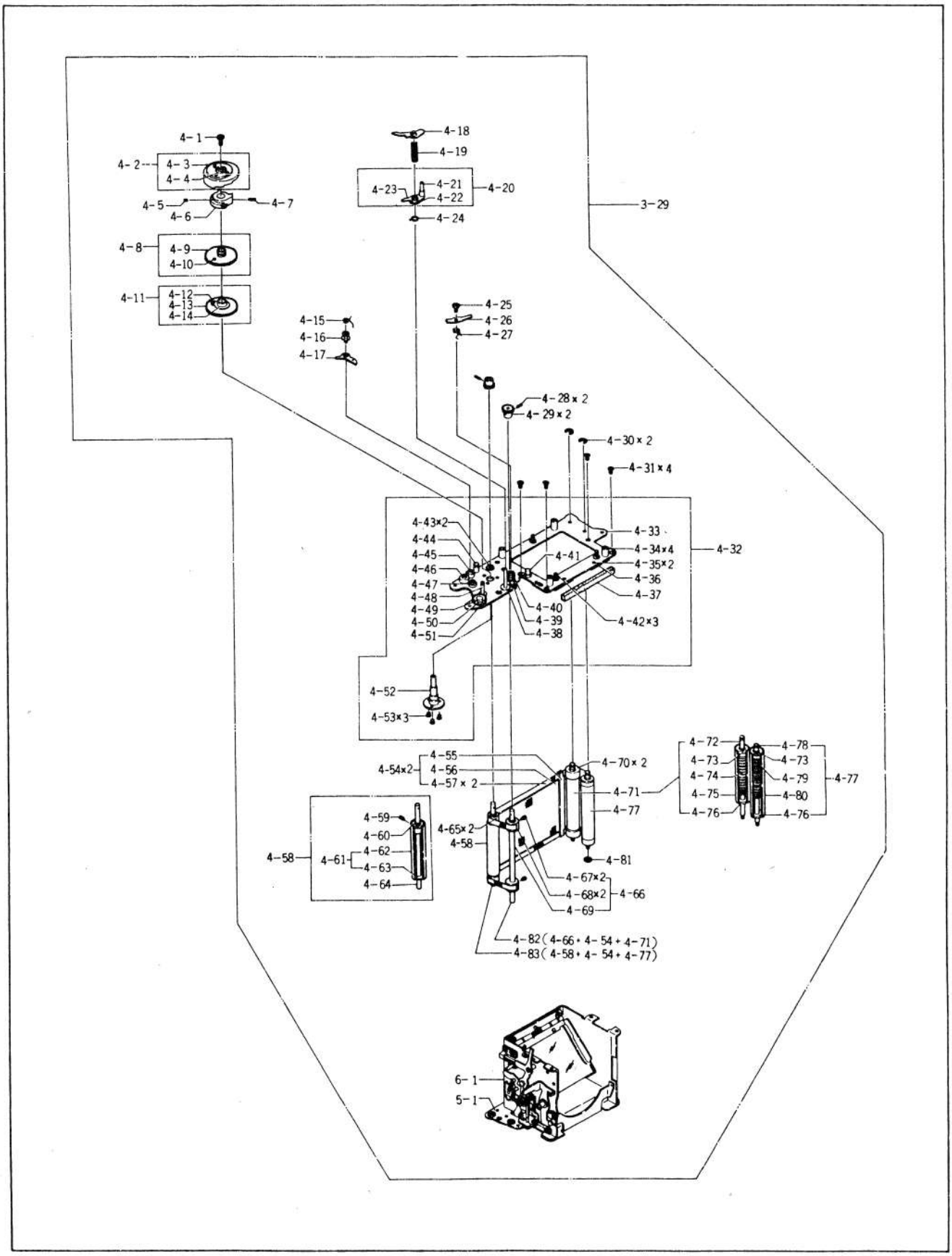
4-1
4-2
4-3
4-4
4-5
4-6
4-7
4-8
4-9
4-10
4-11
4-12
4-13
4-14
4-15
4-16
4-17
4-18
4-19
4-20
4-21
4-22
4-23
4-24
4-25
4-26
4-27
4-28 x 2
4-29 x 2
4-30 x 2
4-31 x 4
3-29
4-32
4-33
4-34x4
4-35x2
4-36
4-37
4-38
4-39
4-40
4-41
4-42x3
4-43x2
4-44
4-45
4-46
4-47
4-48
4-49
4-50
4-51
4-52
4-53x3
4-54x2
4-55
4-56
4-57 x 2
4-58
4-59
4-60
4-61
4-62
4-63
4-64
4-65x2
4-66
4-67x2
4-68x2
4-69
4-70 x 2
4-71
4-72
4-73
4-74
4-75
4-76
4-77
4-78
4-79
4-80
4-81
4-82(4-66+4-54+4-71)
4-83(4-58+4-54+4-77)
6-1
5-1

Ref No.	Part No.	Part Name	Assembled Ref No.	Q'ty	Commonly used with	
					ST605	ST901
4 — 52	32B126540	Shaft		1		
4 — 81	55B99240	Washer		1	•	•
4 — 82	32A103210	1st blind assembly	4 — 66, 4 — 54, 4 — 71	1	•	•
4 — 83	32A103190	2nd blind assembly	4 — 58, 4 — 54, 4 — 77	1	•	•

Fig. 5

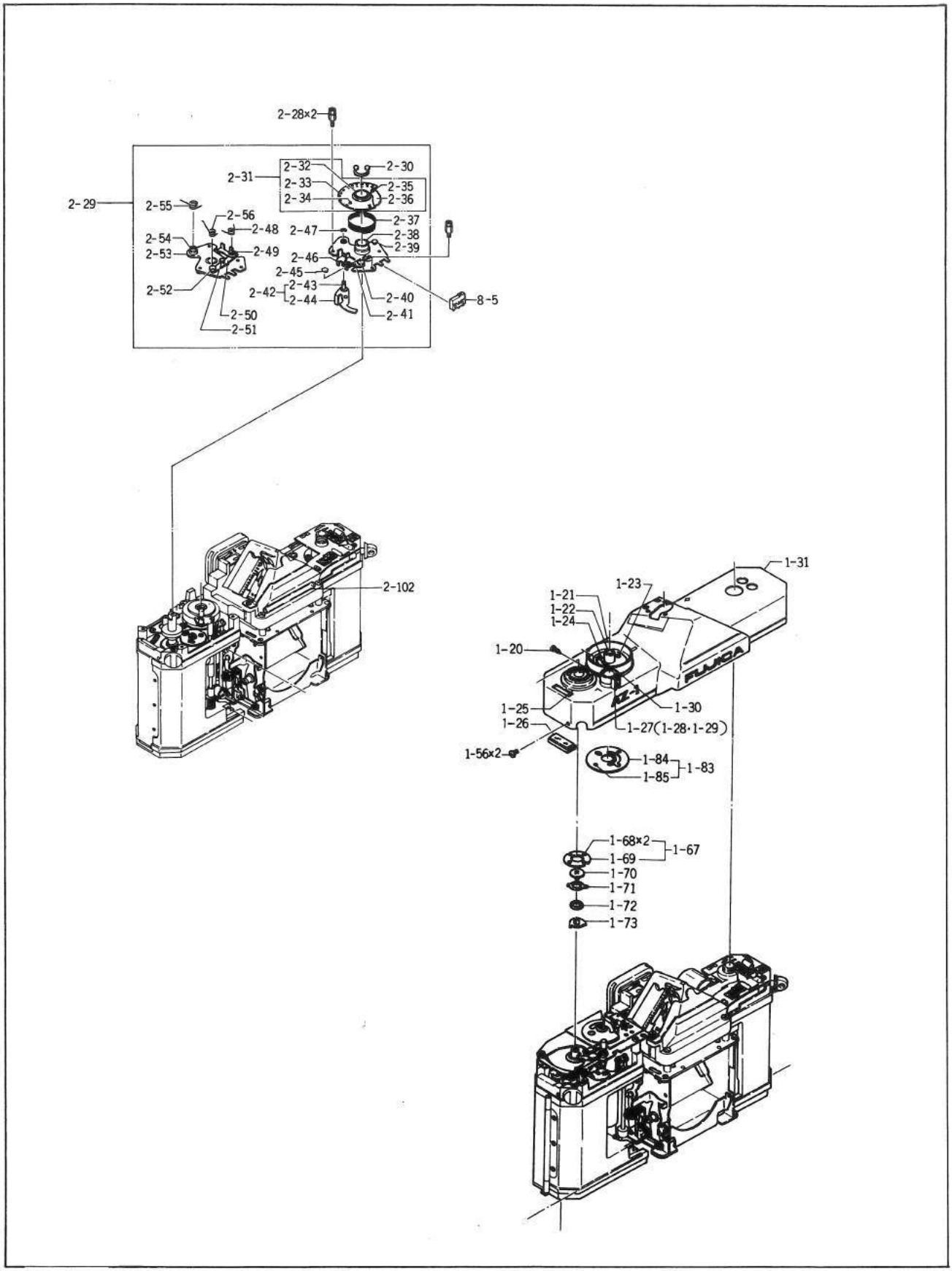
2-28×2
2-31
2-32
2-30
2-33
2-35
2-34
2-36
2-29
2-55
2-56
2-48
2-47
2-37
2-38
2-54
2-53
2-49
2-39
2-46
2-45
2-43
2-42
2-44
2-52
2-40
8-5
2-41
2-50
2-51
2-102
1-31
1-23
1-21
1-22
1-24
1-20
FUJICA
AZ-1
1-25
1-30
1-26
1-27(1-28·1-29)
1-56×2
1-84
1-83
1-85
1-68×2
1-67
1-69
1-70
1-71
1-72
1-73

Fig. 5

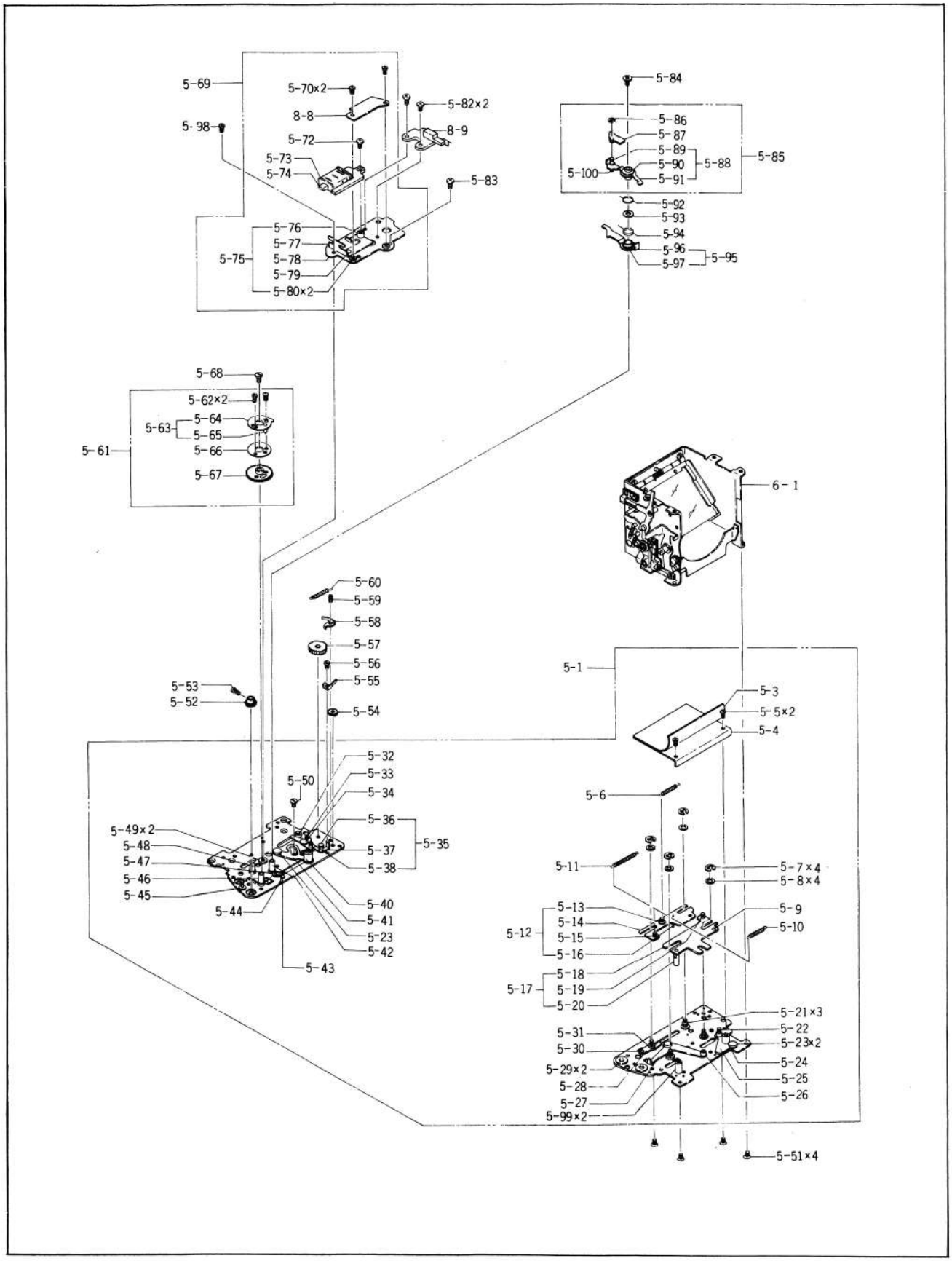
5-69
5-70×2
8-8
5-82×2
8-9
5-98
5-72
5-73
5-74
5-83
5-76
5-77
5-78
5-79
5-80×2
5-75
5-84
5-86
5-87
5-89
5-90
5-91
5-88
5-85
5-100
5-92
5-93
5-94
5-96
5-97
5-95
5-68
5-62×2
5-64
5-65
5-63
5-66
5-67
5-61
6-1
5-60
5-59
5-58
5-57
5-56
5-55
5-54
5-53
5-52
5-1
5-3
5-5×2
5-4
5-32
5-33
5-34
5-50
5-36
5-37
5-38
5-35
5-49×2
5-48
5-47
5-46
5-45
5-44
5-40
5-41
5-23
5-42
5-43
5-6
5-11
5-7×4
5-8×4
5-13
5-14
5-15
5-16
5-12
5-9
5-10
5-18
5-19
5-20
5-17
5-21×3
5-22
5-23×2
5-24
5-25
5-26
5-31
5-30
5-29×2
5-28
5-27
5-99×2
5-51×4

Ref No.	Part No.	Part Name	Assembled Ref No.	Q'ty	Commonly used with	
					ST605	ST901
5 — 1	306A1936900	Mirror set/quick return assembly	5 — 3, 5 — 4, 5 — 5×2, 5 — 6, 5 — 7×4, 5 — 8×4, 5 — 10, 5 — 11, 5 — 12, 5 — 17, 5 — 21×3, 5 — 22, 5 — 23×2, 5 — 25, 5 — 26, 5 — 24, 5 — 27, 5 — 28, 5 — 29×2, 5 — 30, 5 — 31, 5 — 32, 5 — 33, 5 — 34, 5 — 35, 5 — 40, 5 — 41, 5 — 42, 5 — 43, 5 — 44, 5 — 45, 5 — 46, 5 — 47, 5 — 48, 5 — 49×2, 5 — 50	1		
5 — 3	27B94860	Light shielding paper		1	•	•
5 — 4	11B94660	Cover		1	•	•
5 — 5	110M140301S	Screw		2		
5 — 6	50B382110	Spring		1		•
5 — 7	191M15	E - clip		4		
5 — 8	55B94620	Washer		4	•	•
5 — 10	50B382000	Spring		1		•
5 — 11	50B381990	Spring		1		•
5 — 12	29A102800	Interlock plate assembly	5 — 13, 5 — 14, 5 — 15, 5 — 16	1	•	•
5 — 17	29A372010	Interlock plate assembly	5 — 18, 5 — 19, 5 — 20, 5 — 9	1		•
5 — 50	53B94550	Screw		1	•	•
5 — 51	111M170221S	Screw		4		
5 — 52	34B126570	Gear		1	•	•
5 — 53	53B99420	Set screw		1	•	•
5 — 54	34B99250	Ratchet wheel		1	•	•
5 — 55	45B94800	Claw		1	•	•
5 — 56	100M170121B	Set screw		2		
5 — 57	34B126620	Ratchet wheel		1		•

Fig. 5

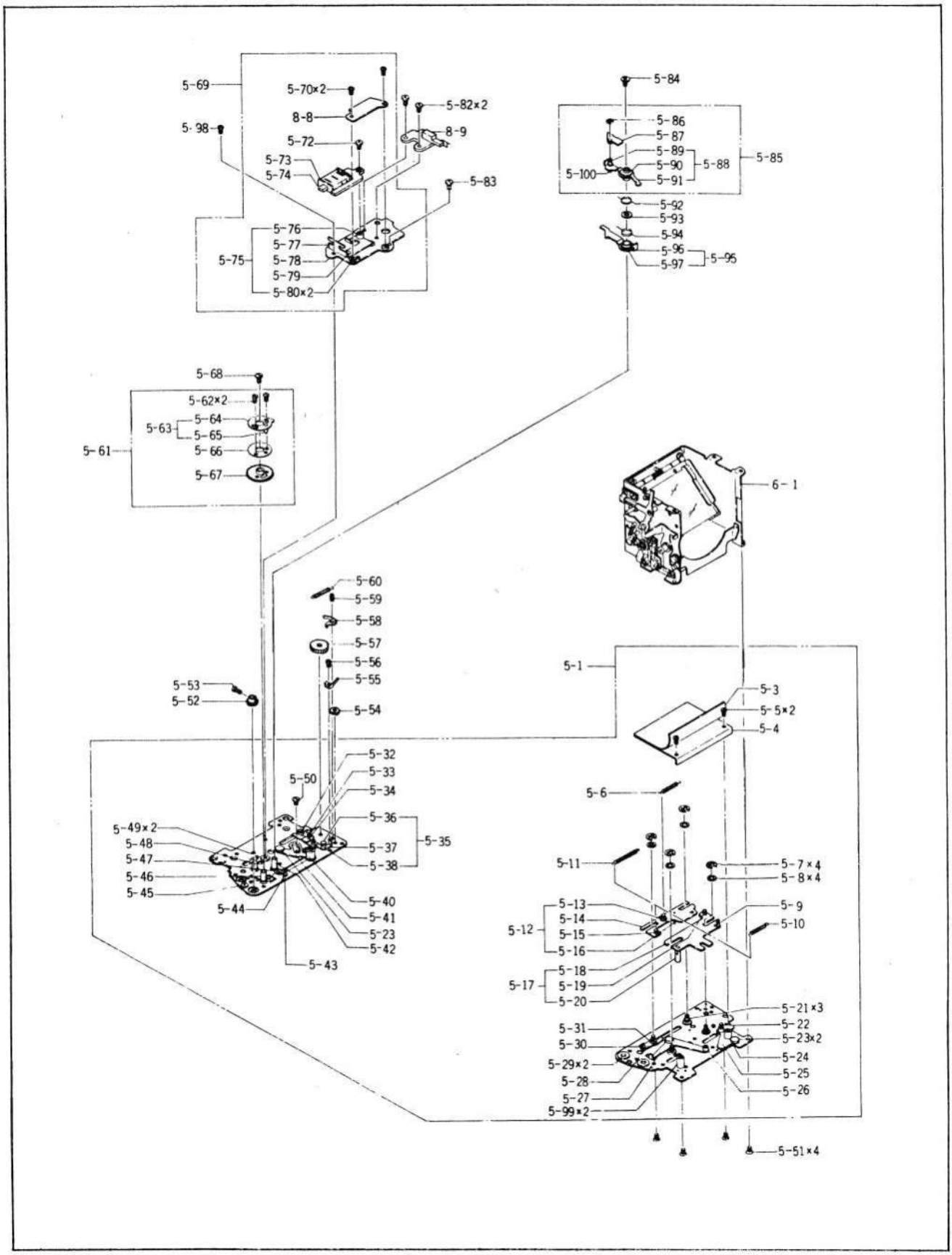
5-69
5-70×2
8-8
5-82×2
8-9
5-98
5-72
5-73
5-74
5-83
5-76
5-77
5-78
5-79
5-80×2
5-75
5-84
5-86
5-87
5-89
5-90
5-91
5-88
5-85
5-100
5-92
5-93
5-94
5-96
5-97
5-95
5-68
5-62×2
5-64
5-63
5-65
5-66
5-61
5-67
6-1
5-60
5-59
5-58
5-57
5-56
5-55
5-54
5-53
5-52
5-1
5-3
5-5×2
5-4
5-32
5-33
5-34
5-50
5-6
5-36
5-49×2
5-48
5-37
5-35
5-47
5-38
5-46
5-45
5-44
5-40
5-41
5-23
5-42
5-43
5-11
5-7×4
5-8×4
5-13
5-14
5-9
5-12
5-15
5-10
5-16
5-18
5-17
5-19
5-20
5-21×3
5-22
5-31
5-23×2
5-30
5-24
5-29×2
5-25
5-28
5-26
5-27
5-99×2
5-51×4

Ref No.	Part No.	Part Name	Assembled Ref No.	Q'ty	Commonly used with	
					ST605	ST901
5 — 58	45B126630	Claw		1		•
5 — 59	53B381950	Set screw		1		•
5 — 60	50B381960	Spring		1		•
5 — 61	34A371300	Gear assembly	5 — 62×2, 5 — 63, 5 — 66, 5 — 67	1		•
5 — 69	125A156830	Magnet switch assembly	5 — 70×2, 8 — 8, 5 — 72, 5 — 73, 5 — 74, 5 — 75	1		
5 — 83	110M140203S	Set screw		1		
5 — 84	53B93480	Set screw		1	•	
5 — 85	47A372350	Magnet lever assembly	5 — 86, 5 — 87, 5 — 88	1		•
5 — 92	50B382430	Spring		1		•
5 — 93	55B382460	Washer		1		•
5 — 94 - 1	50B382420	Spring		0~1		•
5 — 94 - 2	50B382480	Spring		0~1		•
5 — 94 - 3	50B382490	Spring		0~1		•
5 — 95	47A372340	Lever assembly	5 — 96, 5 — 97	1		•
5 — 98	110M140201S	Set screw		1		

Fig. 6

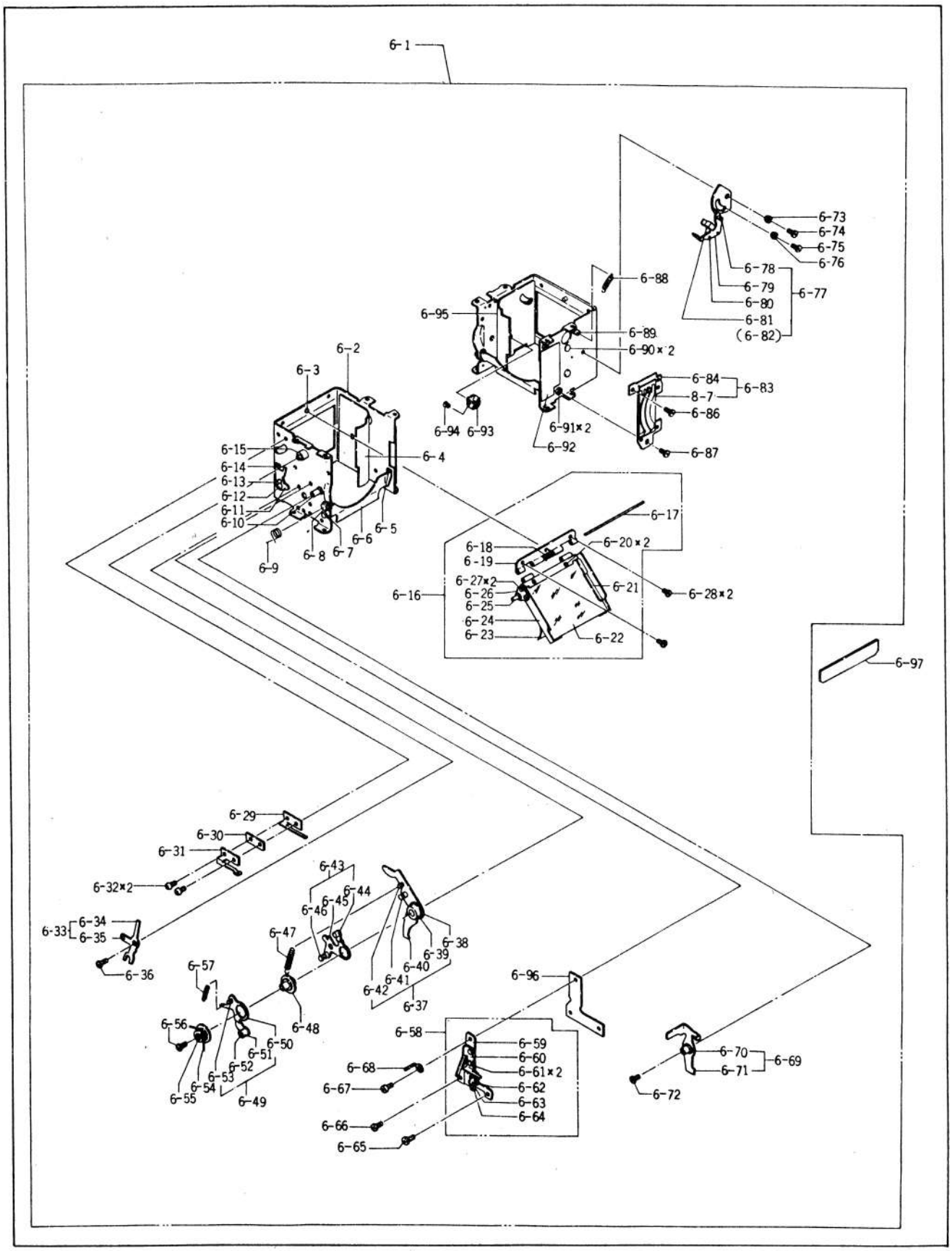
6-1
6-73
6-74
6-75
6-76
6-78
6-79
6-80
6-81
(6-82)
6-77
6-88
6-95
6-89
6-90×2
6-2
6-3
6-84
8-7
6-83
6-86
6-94
6-93
6-91×2
6-92
6-87
6-15
6-14
6-13
6-12
6-11
6-10
6-4
6-5
6-6
6-7
6-8
6-9
6-17
6-18
6-19
6-20×2
6-27×2
6-26
6-25
6-24
6-23
6-16
6-21
6-28×2
6-22
6-97
6-29
6-30
6-31
6-32×2
6-43
6-44
6-45
6-46
6-33
6-34
6-35
6-36
6-47
6-38
6-39
6-40
6-41
6-42
6-37
6-57
6-96
6-56
6-48
6-50
6-51
6-52
6-53
6-54
6-55
6-49
6-58
6-59
6-60
6-61×2
6-62
6-63
6-64
6-68
6-67
6-66
6-65
6-70
6-71
6-69
6-72

Ref No.	Part No.	Part Name	Assembled Ref No.	Q'ty	Commonly used with	
					ST605	ST901
6 — 1	308A1937700	Mirror box assembly	6 — 2, 6 — 3, 6 — 4, 6 — 5, 6 — 6, 6 — 7, 6 — 8, 6 — 9, 6 — 10, 6 — 11, 6 — 12, 6 — 13, 6 — 14, 6 — 15, 6 — 16, 6 — 28×2, 6 — 29, 6 — 30, 6 — 31, 6 — 32×2, 6 — 33, 6 — 36, 6 — 37, 6 — 43, 6 — 47, 6 — 48, 6 — 49, 6 — 54, 6 — 55, 6 — 56, 6 — 57, 6 — 58, 6 — 65, 6 — 66, 6 — 67, 6 — 68, 6 — 69, 6 — 72, 6 — 73, 6 — 74, 6 — 75, 6 — 76, 6 — 77, 6 — 83, 6 — 86, 6 — 87, 6 — 88, 6 — 89, 6 — 90×2, 6 — 91×2, 6 — 92, 6 — 93, 6 — 94, 6 — 95, 6 — 96	1		
6 — 4	27B98360	Light shielding paper		1	•	•
6 — 16	29A373950	Mirror assembly	6 — 17, 6 — 18, 6 — 19, 6 — 20×2, 6 — 21, 6 — 22, 6 — 23, 6 — 24, 6 — 25, 6 — 26, 6 — 27×2	1		•
6 — 22	3B48300	Mirror		1		•
6 — 23	27B98380	Light shielding paper		1	•	•
6 — 28	53B98120	Set screw		2	•	•
6 — 29	109B383500	Synchro - contact		1		•
6 — 30	115B98230	Insulator		1	•	•
6 — 31	101B383510	Synchro - contact		1		•
6 — 32	53K1580	Plastic screw		2	•	•
6 — 33	47A373250	Lever assembly	6 — 34, 6 — 35	1		•
6 — 36	53B93480	Set screw		1	•	•

Fig. 6

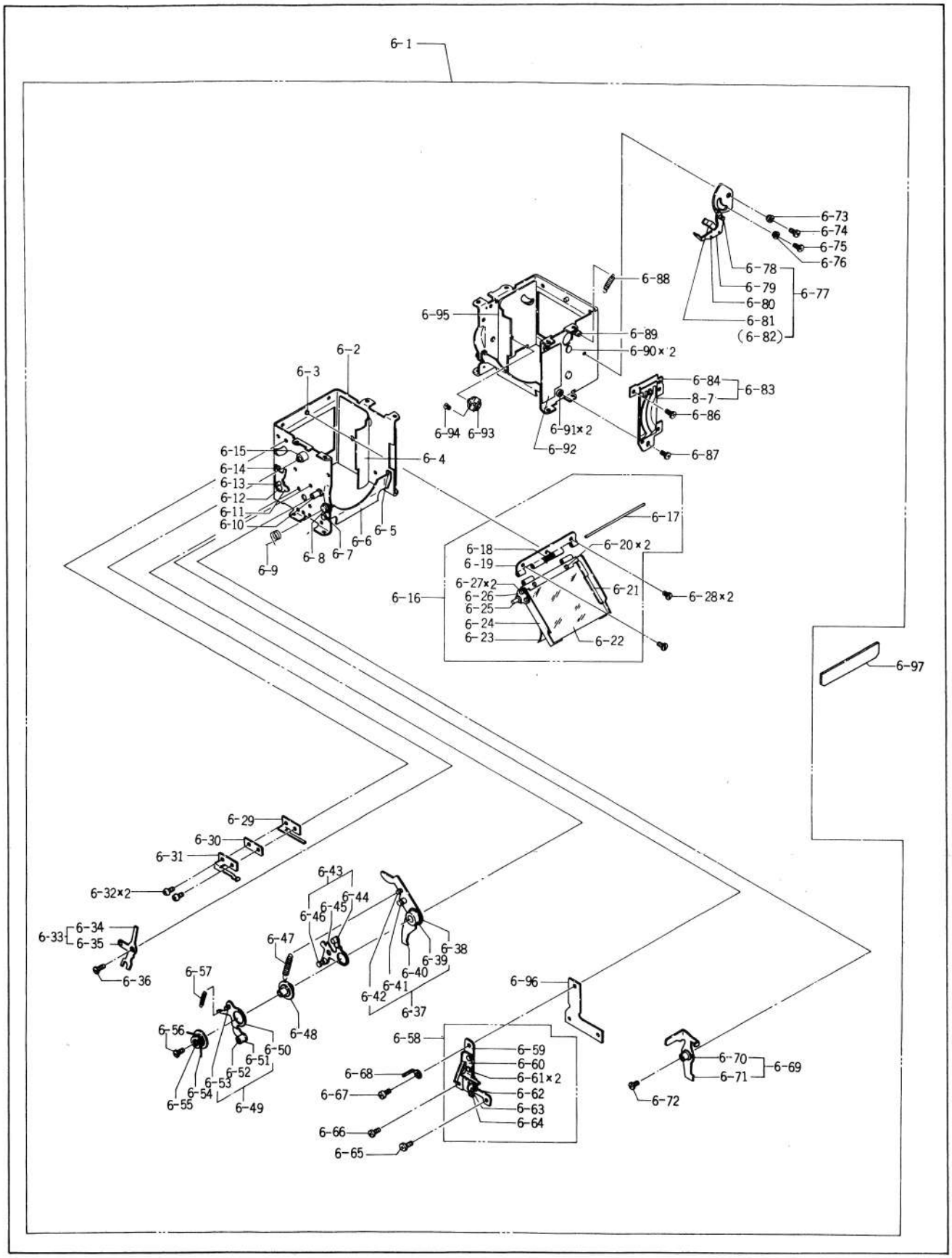
6-1
6-73
6-74
6-75
6-76
6-78
6-79
6-80
6-81
(6-82)
6-77
6-88
6-95
6-89
6-90×2
6-2
6-3
6-84
8-7
6-83
6-86
6-94
6-93
6-91×2
6-92
6-87
6-15
6-14
6-13
6-12
6-11
6-10
6-4
6-5
6-6
6-7
6-8
6-9
6-17
6-18
6-19
6-20×2
6-27×2
6-26
6-25
6-24
6-23
6-16
6-21
6-28×2
6-22
6-97
6-29
6-30
6-31
6-32×2
6-43
6-44
6-45
6-46
6-33
6-34
6-35
6-36
6-47
6-38
6-39
6-40
6-41
6-42
6-37
6-57
6-96
6-56
6-48
6-50
6-51
6-52
6-53
6-54
6-55
6-49
6-58
6-59
6-60
6-61×2
6-62
6-63
6-64
6-68
6-67
6-66
6-65
6-70
6-71
6-69
6-72

Ref No.	Part No.	Part Name	Assembled Ref No.	Q'ty	Commonly used with	
					ST605	ST901
6 — 37	32A373100	Mirror shifter assembly	6 — 38, 6 — 39, 6 — 40, 6 — 41, 6 — 42	1		•
6 — 43	47A373120	Interlock lever assembly	6 — 44, 6 — 45, 6 — 46	1		•
6 — 47	50B383090	Spring		1		•
6 — 48	32B383550	Sleeve		1		•
6 — 49	47A373150	Timing lever assembly	6 — 50, 6 — 51, 6 — 52, 6 — 53	1		•
6 — 54	50B383230	Spring		1		•
6 — 55	32B383560	Shaft		1		•
6 — 56	53B383570	Set screw		1		•
6 — 57	50B383220	Spring		1		•
6 — 58	121A373300	SC switch assembly	6 — 59, 6 — 60, 6 — 61×2, 6 — 62, 6 — 63, 6 — 64	1		•
6 — 65	110M170223S	Set screw		1		
6 — 66	110M140251S	Set screw		1		
6 — 67	110M140253S	Set screw		1		
6 — 68	111B383060	Cord clamp		1		•
6 — 69	47A1937760	Stop-down lever assembly	6 — 70, 6 — 71	1		
6 — 72	53B93480	Screw		1	•	•
6 — 73	42B124030	Bushing		1		•
6 — 74	110M170251S	Set screw		1		
6 — 75	110M140251S	Set screw		1		
6 — 76	42B124050	Bushing		1		•
6 — 77	47A1443460	Rotary plate assembly	6 — 78, 6 — 79, 6 — 80, 6 — 81, 6 — 82	1	ST705	
6 — 83	110A156500	Aperture resistor assembly	6 — 84, 8 — 7	1		
6 — 86	110M140251S	Set screw		1		
6 — 87	110M140251S	Set screw		1		
6 — 88	50B124090	Spring		1		•

Fig. 6

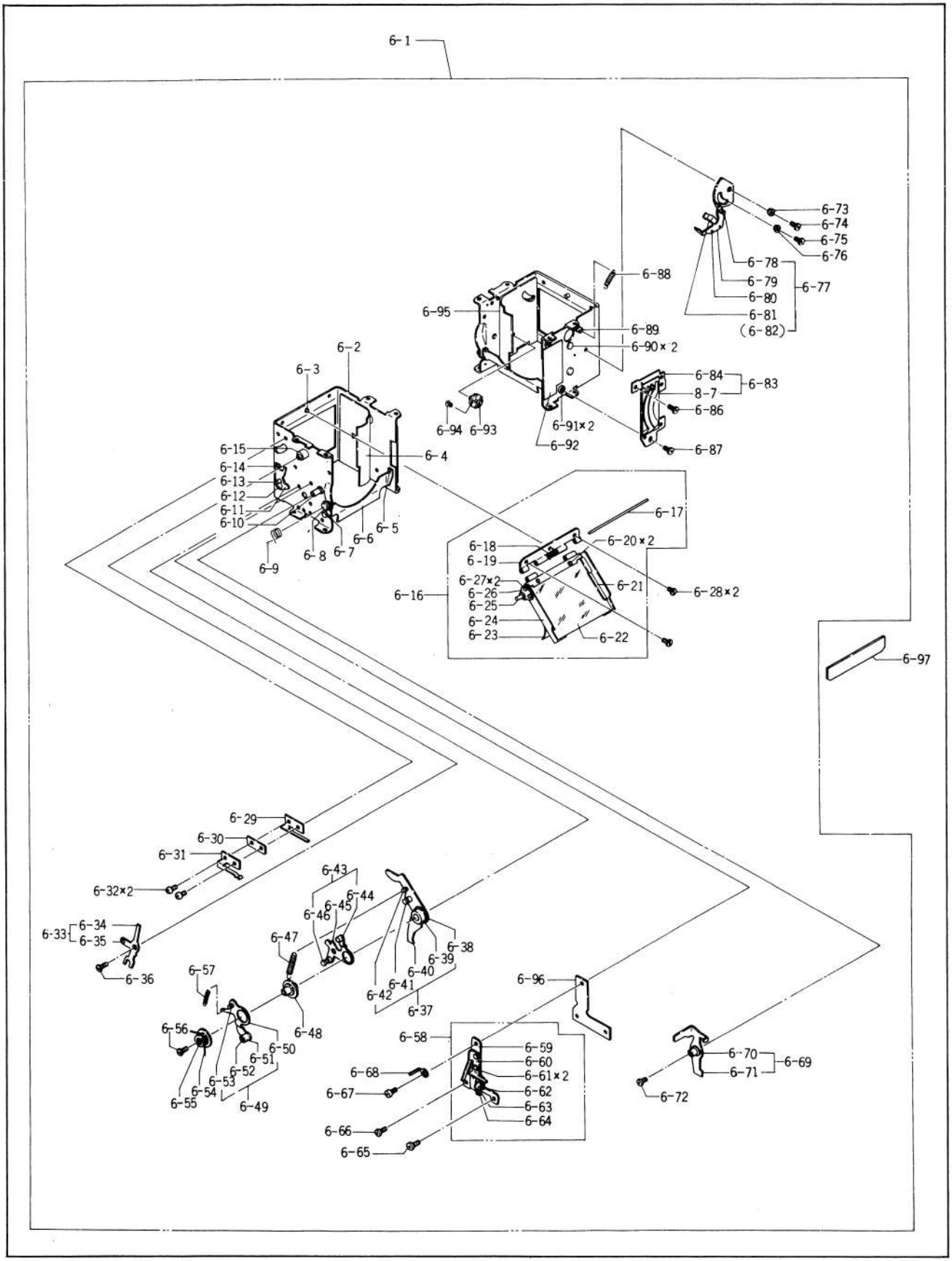
6-1
6-73
6-74
6-75
6-76
6-78
6-79
6-80
6-81
(6-82)
6-77
6-88
6-95
6-89
6-90×2
6-2
6-3
6-84
8-7
6-83
6-86
6-94
6-93
6-91×2
6-92
6-87
6-15
6-14
6-13
6-12
6-11
6-10
6-4
6-17
6-18
6-19
6-20×2
6-27×2
6-26
6-25
6-24
6-23
6-16
6-21
6-28×2
6-22
6-9
6-8
6-7
6-6
6-5
6-97
6-29
6-30
6-31
6-32×2
6-43
6-44
6-45
6-46
6-33
6-34
6-35
6-36
6-47
6-38
6-39
6-40
6-41
6-42
6-37
6-57
6-96
6-56
6-48
6-50
6-51
6-52
6-53
6-54
6-55
6-49
6-58
6-59
6-60
6-61×2
6-62
6-63
6-64
6-68
6-67
6-66
6-65
6-70
6-71
6-69
6-72

Ref No.	Part No.	Part Name	Assembled Ref No.	Q'ty	Commonly used with	
					ST605	ST901
6 — 92	27B124410	Light shielding plate		1	•	•
6 — 93	87B98050	Mirror stopper		1	•	•
6 — 94	111M140403S	Set screw		1		
6 — 95	27B383010	Light shielding paper		1		•
6 — 97	27B98380	Blind		1		

5. Penta prism assembly (3 – 7) and photocell assembly (3 – 1)

a. For removal of the penta prism assembly (3 — 7), refer to II — 2 (Amplifier assembly (8 — 1)).

b. Photocell assembly (3 — 1)

(1) Disconnect the lead wires (8 — 52, 8 — 51, 8 — 39 and 8 — 50), and remove the printed circuit board assembly (8 — 3).

(2) Remove the set screws (3 — 6 and 2 — 61), and pull the photocell assembly (3 — 1) upward to remove it.

6. Prism (3 – 12)

When removing the prism (3 — 12) alone for cleaning inside of the viewfinder, the following instructions apply.

a. Remove the printed circuit board assembly (8 — 3).

b. Disconnect the lead wires (8 — 23, 8 — 24, 8 — 37, 8 — 53, 8 — 21 and 8 — 31) extended from the shutter resistor assembly at the amplifier assembly.

c. Remove the two set screws (3 — 8), and remove the prism holder (3 — 9).

d. Raise the flexible printed circuit board, and take out the penta prism.

7. Focusing screen assembly (3 – 18)

Loosen the three nuts (3 — 23), and remove the focusing screen assembly (3 — 18) carefully so as not to lose the leaf springs (3 — 25 and 3 — 26).

Fig. 7

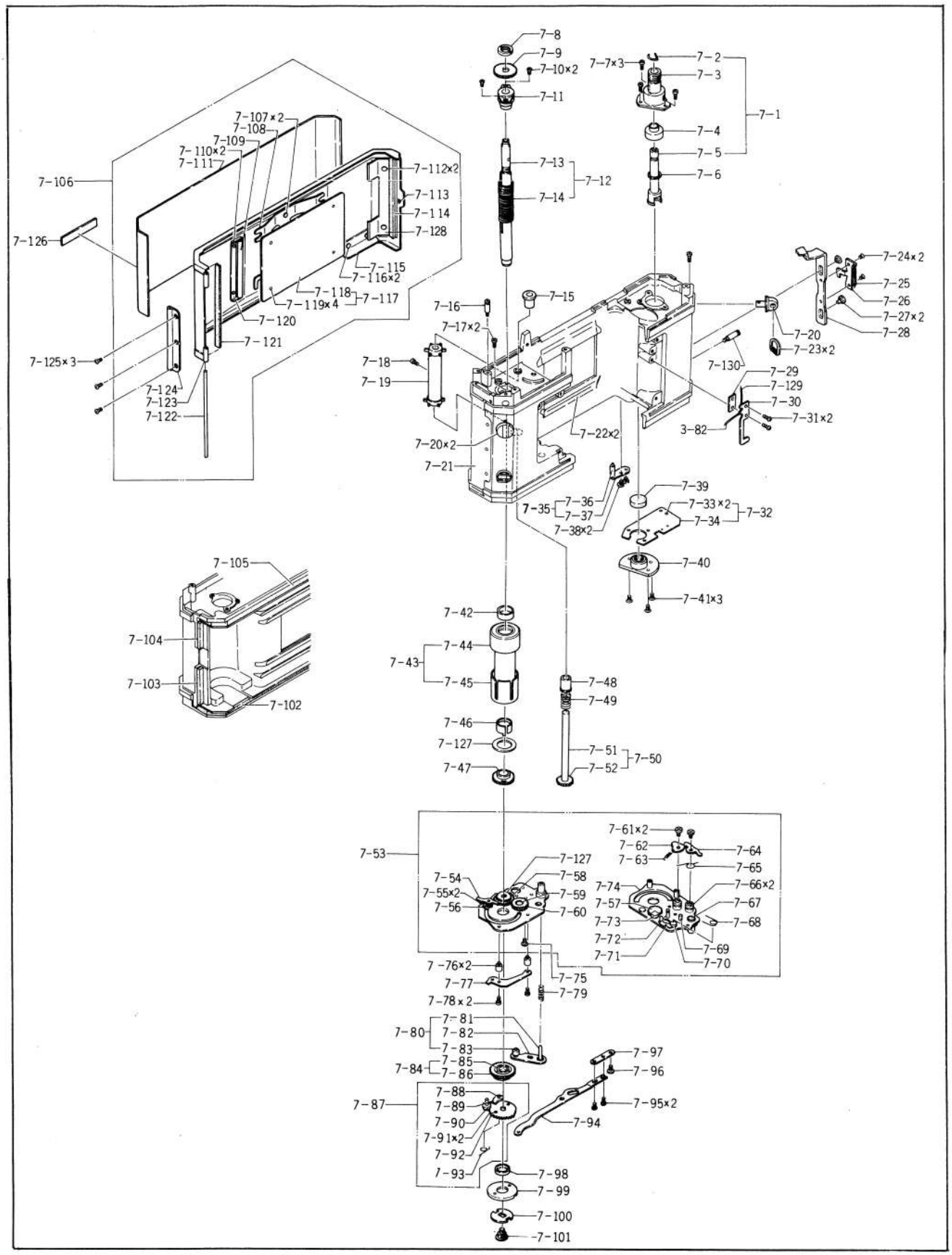
7-8
7-9
7-10×2
7-7×3
7-2
7-3
7-1
7-11
7-4
7-5
7-6
7-13
7-12
7-14
7-107×2
7-108
7-109
7-110×2
7-111
7-106
7-112×2
7-113
7-114
7-128
7-126
7-115
7-116×2
7-118
7-117
7-119×4
7-120
7-121
7-125×3
7-124
7-123
7-122
7-24×2
7-25
7-26
7-27×2
7-28
7-15
7-16
7-17×2
7-20
7-23×2
7-130
7-18
7-19
7-29
7-129
7-30
7-31×2
3-82
7-22×2
7-20×2
7-21
7-39
7-35
7-36
7-37
7-38×2
7-33×2
7-34
7-32
7-40
7-41×3
7-105
7-104
7-103
7-102
7-42
7-43
7-44
7-45
7-48
7-49
7-46
7-127
7-47
7-51
7-52
7-50
7-53
7-61×2
7-62
7-63
7-64
7-65
7-127
7-54
7-58
7-55×2
7-59
7-56
7-60
7-74
7-66×2
7-57
7-67
7-73
7-68
7-72
7-69
7-71
7-70
7-76×2
7-77
7-75
7-79
7-78×2
7-80
7-81
7-82
7-83
7-84
7-85
7-86
7-97
7-96
7-87
7-88
7-89
7-90
7-91×2
7-92
7-93
7-95×2
7-94
7-98
7-99
7-100
7-101

Ref No.	Part No.	Part Name	Assembled Ref No.	Q'ty	Commonly used with ST605	Commonly used with ST901
7 — 1	311A1437720	Rewind spindle assembly	7 — 2, 7 — 3, 7 — 4, 7 — 5	1	•	
7 — 8	53B93320	Screw ring		1	•	•
7 — 9	34B380610	Gear		1		•
7 — 10	111M170301S	Set screw		2		
7 — 11	31B93300	Spool holder		1	•	•
7 — 12	32A1936650	Take-up spindle assembly	7 — 13, 7 — 14	1		
7 — 15	32B94330	Flange		1	•	•
7 — 16	53B93790	Screw		1	•	•
7 — 17	110M170601S	Set screw		2		
7 — 18	53B93270	Set screw		1	•	•
7 — 19	34B93220	Sprocket		1	•	•
7 — 20	41B93840	Neck strap eyelet		2	•	•
7 — 22	27B94310	Blind		2		
7 — 23	23B380300	Clip		2	•	•
7 — 24	111M170201S	Set screw		2		
7 — 25	50B96130	Spring		1	•	•
7 — 26	19B380800	Key plate		1	•	•
7 — 27	19B96120	Guide		2	•	•
7 — 28	19B1440770	Base plate		1	•	
7 — 29	115B93920	Insulator		1	•	•
7 — 30	109B126030	X-contact plate		1		
7 — 31	53K19860	Plastic screw		2	•	•
7 — 32	110A1936660	Printed circuit board assembly	7 — 33×2, 7 — 34	1		
7 — 35	85A102770	Positioning plate assembly	7 — 36, 7 — 37	1	•	•
7 — 38	110M200301S	Set screw		2		
7 — 39	27B93890	Moquette		1	•	•
7 — 40	53B93820	Tripod socket		1		
7 — 41	111M200501N	Set screw		1		

Fig. 7

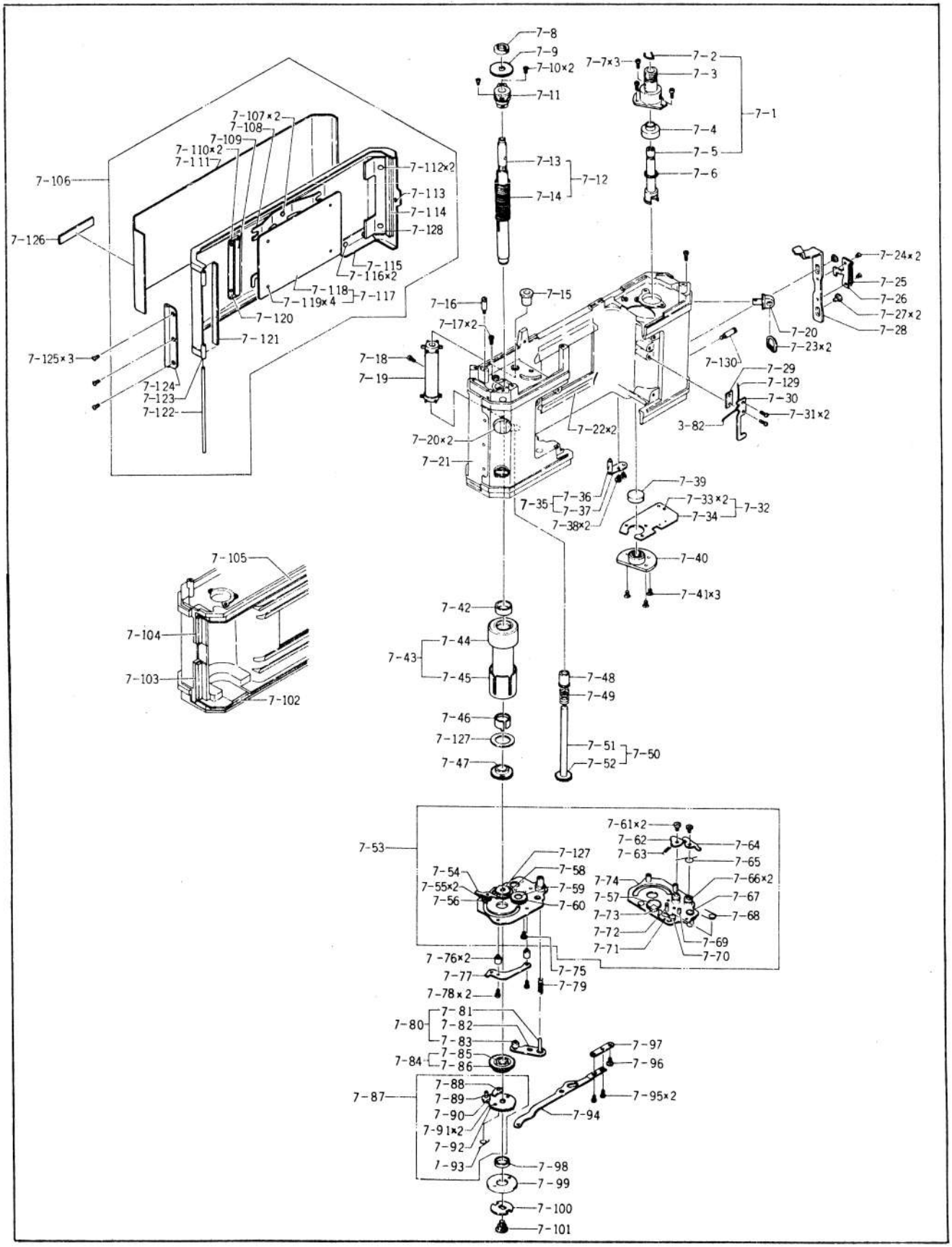
7-8
7-9
7-10×2
7-7×3
7-2
7-3
7-1
7-11
7-4
7-5
7-6
7-13
7-12
7-14
7-107×2
7-108
7-109
7-110×2
7-111
7-106
7-112×2
7-113
7-114
7-128
7-126
7-115
7-116×2
7-118
7-117
7-119×4
7-120
7-121
7-125×3
7-124
7-123
7-122
7-24×2
7-25
7-26
7-27×2
7-28
7-16
7-15
7-17×2
7-20
7-23×2
7-18
7-19
7-130
7-29
7-129
7-30
7-31×2
3-82
7-22×2
7-20×2
7-21
7-39
7-35
7-36
7-37
7-38×2
7-33×2
7-34
7-32
7-40
7-41×3
7-105
7-104
7-103
7-102
7-42
7-44
7-43
7-45
7-48
7-49
7-46
7-127
7-47
7-51
7-52
7-50
7-53
7-61×2
7-62
7-63
7-64
7-65
7-127
7-54
7-58
7-55×2
7-59
7-56
7-60
7-74
7-66×2
7-57
7-67
7-73
7-68
7-72
7-69
7-71
7-70
7-76×2
7-77
7-75
7-79
7-78×2
7-81
7-80
7-82
7-83
7-84
7-85
7-86
7-97
7-96
7-87
7-88
7-89
7-90
7-91×2
7-92
7-93
7-95×2
7-94
7-98
7-99
7-100
7-101

Ref No.	Part No.	Part Name	Assembled Ref No.	Q'ty	Commonly used with ST605	Commonly used with ST901
7 — 42	42B93330	Bushing		1	•	•
7 — 43	37A1936630	Spool assembly	7 — 44, 7 — 45	1		
7 — 46	50B1939640	Friction plate		1		
7 — 47	34B1939510	Spur gear		1		
7 — 48	32B94320	Sleeve		1	•	•
7 — 49	50B93250	Spring		1	•	•
7 — 50	32A370600	Sprocket shaft assembly	7 — 51, 7 — 52	1		•
7 — 53	46A1936620	Base plate assembly	7 — 54, 7 — 55×2, 7 — 56, 7 — 57, 7 — 58, 7 — 59, 7 — 60, 7 — 61×2, 7 — 62, 7 — 63, 7 — 64, 7 — 65, 7 — 66×2, 7 — 67, 7 — 68, 7 — 69, 7 — 70, 7 — 71, 7 — 72, 7 — 73, 7 — 74, 7 — 127	1		
7 — 61	53B93480	Set screw		2	•	•
7 — 62	47B1939620	Lever		1		
7 — 63	50B93500	Spring		1	•	•
7 — 64	47B93470	Lever		1	•	•
7 — 65	50B93460	Spring		1	•	•
7 — 68	50B93570	Spring		1	•	•
7 — 75	110M200401S	Set screw		1		
7 — 76	53B1939550	Screw		2		
7 — 77	46B1939530	Plate		1		
7 — 78	111M170301N	Set screw		2		
7 — 79	50B93720	Spring		1	•	•
7 — 80	86A102750	Film rewind button assembly	7 — 81, 7 — 82, 7 — 83	1	•	•
7 — 84	34A370740	Ratchet wheel assembly		1		•
7 — 87	34A1936590	Ratchet assembly	7 — 88, 7 — 89, 7 — 90,	1		

Fig. 7

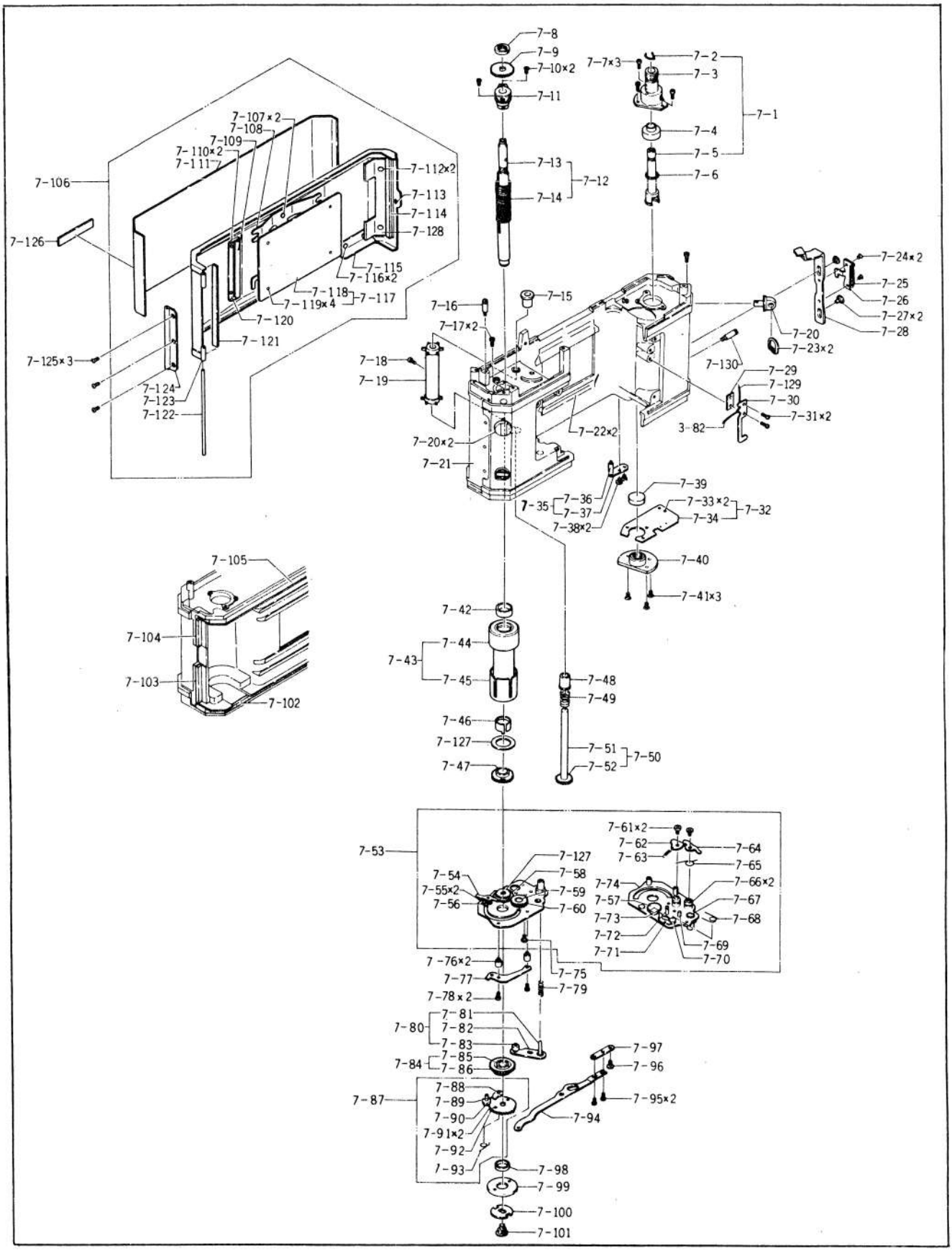
7-8
7-9
7-10×2
7-7×3
7-2
7-3
7-1
7-11
7-4
7-5
7-6
7-13
7-12
7-14
7-107×2
7-108
7-109
7-110×2
7-111
7-106
7-112×2
7-113
7-114
7-128
7-126
7-115
7-116×2
7-118
7-117
7-119×4
7-120
7-121
7-125×3
7-124
7-123
7-122
7-24×2
7-25
7-26
7-27×2
7-28
7-15
7-16
7-17×2
7-20
7-23×2
7-18
7-19
7-130
7-29
7-129
7-30
7-31×2
3-82
7-22×2
7-20×2
7-21
7-39
7-35
7-36
7-37
7-38×2
7-33×2
7-34
7-32
7-40
7-41×3
7-105
7-104
7-103
7-102
7-42
7-44
7-43
7-45
7-48
7-49
7-46
7-127
7-47
7-51
7-52
7-50
7-53
7-61×2
7-62
7-63
7-64
7-65
7-54
7-55×2
7-56
7-58
7-59
7-60
7-127
7-74
7-57
7-73
7-72
7-71
7-66×2
7-67
7-68
7-69
7-70
7-76×2
7-77
7-75
7-79
7-78×2
7-80
7-81
7-82
7-83
7-84
7-85
7-86
7-97
7-96
7-87
7-88
7-89
7-90
7-91×2
7-92
7-93
7-94
7-95×2
7-98
7-99
7-100
7-101

Ref No.	Part No.	Part Name	Assembled Ref No.	Q'ty	Commonly used with ST605	Commonly used with ST901
			7−91×2, 7−92, 7−93			
7− 93	50B93680	Spring		1	•	•
7− 94	47B1939580	Mirror set lever		1		
7− 95	110M170201S	Set screw		2		
7− 96	53B93480	Set screw		1	•	•
7− 97	53B380520	Connecting plate		1		
7− 98	42B1939570	Collar		1		
7− 99	27B1939540	Blind		1		
7−100	48B1939520	Connecting plate		1		
7−101	53B1939560	Set screw		1		
7−102	27B94300	Moquette		1	•	•
7−103	27B93980	Moquette		1	•	•
7−104	27B93990	Moquette		1	•	•
7−105	27B94290	Moquette		1	•	•
7−106	302A1439700	Film chamber door assembly	7−107×2, 7−108, 7−109, 7−110×2, 7−111, 7−112×2, 7−113, 7−114, 7−115, 7−116×2, 7−117, 7−120, 7−121, 7−122, 7−123, 7−124, 7−128	1	•	
7−109	37B1590	Roller		1	•	•
7−117	44A102930	Pressure plate assembly	7−118, 7−119	1	•	•
7−121	59B96210	Moquette		1	•	•
7−122	19B96090	Shaft		1	•	•
7−124	19B96080	Hinge		1	•	•
7−125	111M170201S	Set screw		3		
7−126	58B96180	Number plate		1		
7−129	110B121510	Lead wire		1		

Fig. 8-1

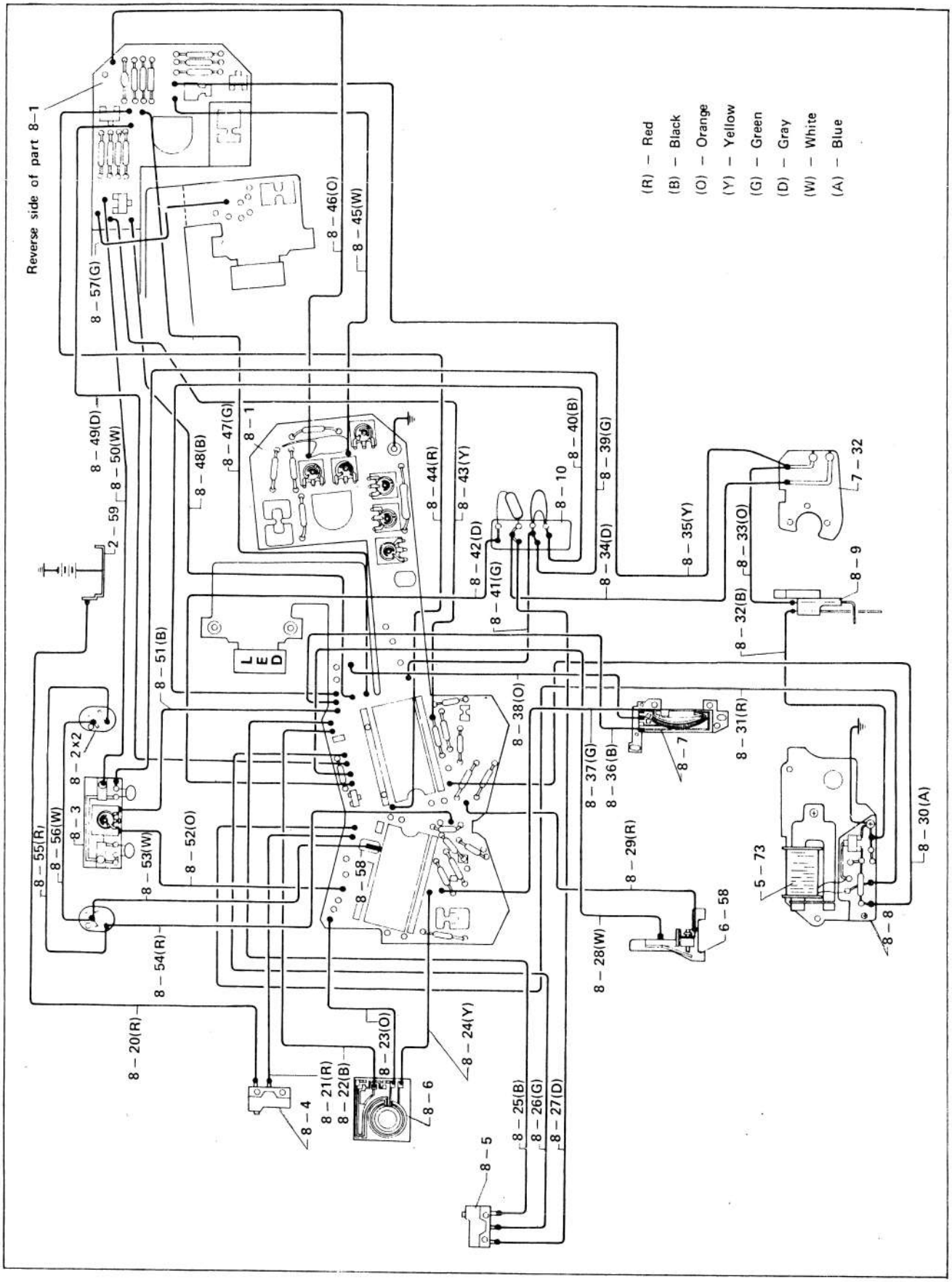
Reverse side of part 8-1
(R) – Red
(B) – Black
(O) – Orange
(Y) – Yellow
(G) – Green
(D) – Gray
(W) – White
(A) – Blue
8 – 57(G)
8 – 46(O)
8 – 45(W)
8 – 49(D)
8 – 50(W)
8 – 48(B)
8 – 47(G)
8 – 1
8 – 44(R)
8 – 43(Y)
8 – 40(B)
8 – 39(G)
8 – 10
8 – 42(D)
8 – 41(G)
8 – 34(D)
8 – 35(Y)
8 – 33(O)
7 – 32
8 – 9
8 – 32(B)
2 – 59
8 – 51(B)
L E D
8 – 38(O)
8 – 31(R)
8 – 7
8 – 37(G)
8 – 36(B)
8 – 2×2
8 – 3
8 – 55(R)
8 – 56(W)
8 – 53(W)
8 – 52(O)
8 – 58
8 – 29(R)
5 – 73
8 – 30(A)
6 – 58
8 – 8
8 – 28(W)
8 – 54(R)
8 – 20(R)
8 – 23(O)
8 – 24(Y)
8 – 21(R)
8 – 22(B)
8 – 6
8 – 4
8 – 25(B)
8 – 26(G)
8 – 27(D)
8 – 5

Ref No.	Part No.	Part Name	Assembled Ref No.	Q'ty	Commonly used with	
					ST605	ST901
8 — 1	110A156450	Amplifier assembly		1		
8 — 2	106B156370	Photocell		2		
8 — 3	110A156490	Printed circuit board assembly		1		
8 — 4	121K258831	SM switch		1		
8 — 5	121B1934380	SN switch		1		
8 — 6	117B156300	Shutter resistor		1		
8 — 7	117B156310	Aperture resistor		1		
8 — 8	110A156470	Magnet circuit assembly		1		
8 — 9	121B156320	SA switch		1		
8 — 10	110A156980	Printed circuit board assembly		1		
8 — 20	110B156560	Lead wire (red)		1		
8 — 21	110B156570	Lead wire (red)		1		
8 — 22	110B156650	Lead wire (black)		1		
8 — 23	110B156660	Lead wire (orange)		1		
8 — 24	110B156640	Lead wire (yellow)		1		
8 — 25	110B156600	Lead wire (black)		1		
8 — 26	110B156591	Lead wire (green)		1		
8 — 27	110B156581	Lead wire (gray)		1		
8 — 28	110B156550	Lead wire (white)		1		
8 — 29	110B156540	Lead wire (red)		1		
8 — 30	110B156900	Lead wire (blue)		1		
8 — 31	110B156670	Lead wire (red)		1		
8 — 32	110B156520	Lead wire (black)		1		
8 — 33	110B156810	Lead wire (orange)		1		
8 — 34	110B156680	Lead wire (gray)		1		
8 — 35	110B156531	Lead wire (yellow)		1		
8 — 36	110B156620	Lead wire (black)		1		
8 — 37	110B156630	Lead wire (green)		1		
8 — 38	110B156610	Lead wire (orange)		1		

Fig. 8-2

8-1
8-60
8-61
8-62×2
8-63
8-64
8-65
8-66
8-67
8-68
8-69
8-70
8-71
8-72
8-73
8-74
8-75
8-76
8-77
8-78
8-79
8-80
8-81
8-82
8-83
8-84
8-85
8-86
8-87
8-88
8-89
8-90
8-91
8-92
8-93
8-94
8-95
8-96
8-97
8-98
8-99
8-100
8-101
8-102
8-103
8-104
8-105
8-106
8-107
8-108
8-109
8-110
8-111
8-112
8-113
8-114
8-115

KL83A-4

Reverse side

8-8
8-122
8-123
8-121
8-120

8-10
8-125
8-126
8-127

8-3
8-130
8-132×2
8-131×2
8-135
8-134
8-133

Ref No.	Part No.	Part Name	Assembled Ref No.	Q'ty	Commonly used with ST605	Commonly used with ST901
8 — 39	110B156730	Lead wire (green)		1		
8 — 40	110B156710	Lead wire (black)		1		
8 — 41	110B156920	Lead wire (green)		1		
8 — 42	110B156910	Lead wire (gray)		1		
8 — 43	110B156880	Lead wire (yellow)		1		
8 — 44	110B156820	Lead wire (red)		1		
8 — 45	110B156841	Lead wire (white)		1		
8 — 46	110B156860	Lead wire (orange)		1		
8 — 47	110B156730	Lead wire (green)		1		
8 — 48	110B156870	Lead wire (black)		1		
8 — 49	110B156850	Lead wire (gray)		1		
8 — 50	110B156841	Lead wire (white)		1		
8 — 51	110B156710	Lead wire (black)		1		
8 — 52	110B156890	Lead wire (orange)		1		
8 — 53	110B156700	Lead wire (white)		1		
8 — 54	110B156690	Lead wire (red)		1		
8 — 55	110B1440492	Lead wire (red)		1	•	
8 — 56	110B1440482	Lead wire (white)		1	•	
8 — 57	110B156730	Lead wire (green)		1		
8 — 58	110B156800	Tube		1		
8 — 123-1	116K277820	Capacitor 0.1μF 35V		0~1		
8 — 123-2	116K277830	Capacitor 0.15μF 35V		0~1		
8 — 123-3	116K277840	Capacitor 0.22μF 35V		0~1		
8 — 123-4	116K277850	Capacitor 0.33μF 35V		0~1		
8 — 123-5	116K277860	Capacitor 0.47μF 35V		0~1		

Fig. 6

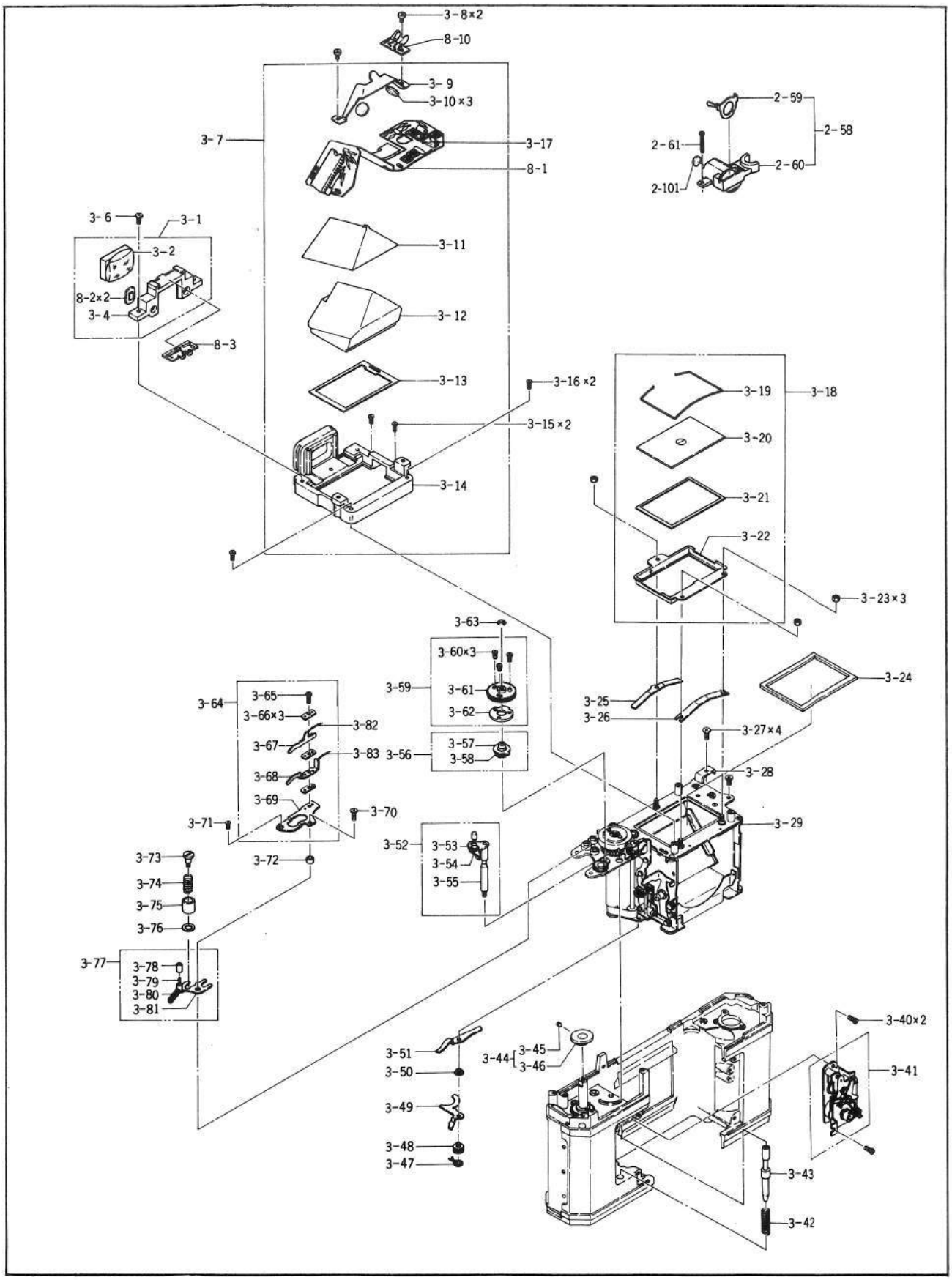
3-8×2
8-10
3-9
3-10×3
3-7
3-17
8-1
2-59
2-58
2-61
2-60
2-101
3-6
3-1
3-2
8-2×2
3-4
8-3
3-11
3-12
3-13
3-16×2
3-15×2
3-14
3-19
3-18
3-20
3-21
3-22
3-23×3
3-63
3-60×3
3-59
3-61
3-62
3-24
3-25
3-26
3-27×4
3-64
3-65
3-66×3
3-82
3-67
3-83
3-56
3-57
3-58
3-68
3-28
3-69
3-70
3-71
3-29
3-52
3-53
3-54
3-55
3-72
3-73
3-74
3-75
3-76
3-77
3-78
3-79
3-80
3-81
3-40×2
3-51
3-44
3-45
3-46
3-41
3-50
3-49
3-48
3-47
3-43
3-42

Blank Page

PARTS LIST

Zoom Lens Case Camera Case	for	Fujica AZ – 1 Fujica ST705W Fujica ST605N

FUJI FILM

FUJI PHOTO FILM CO., LTD.

26-30, Nishiazabu 2-Chome, Minato-ku, Tokyo 106, Japan

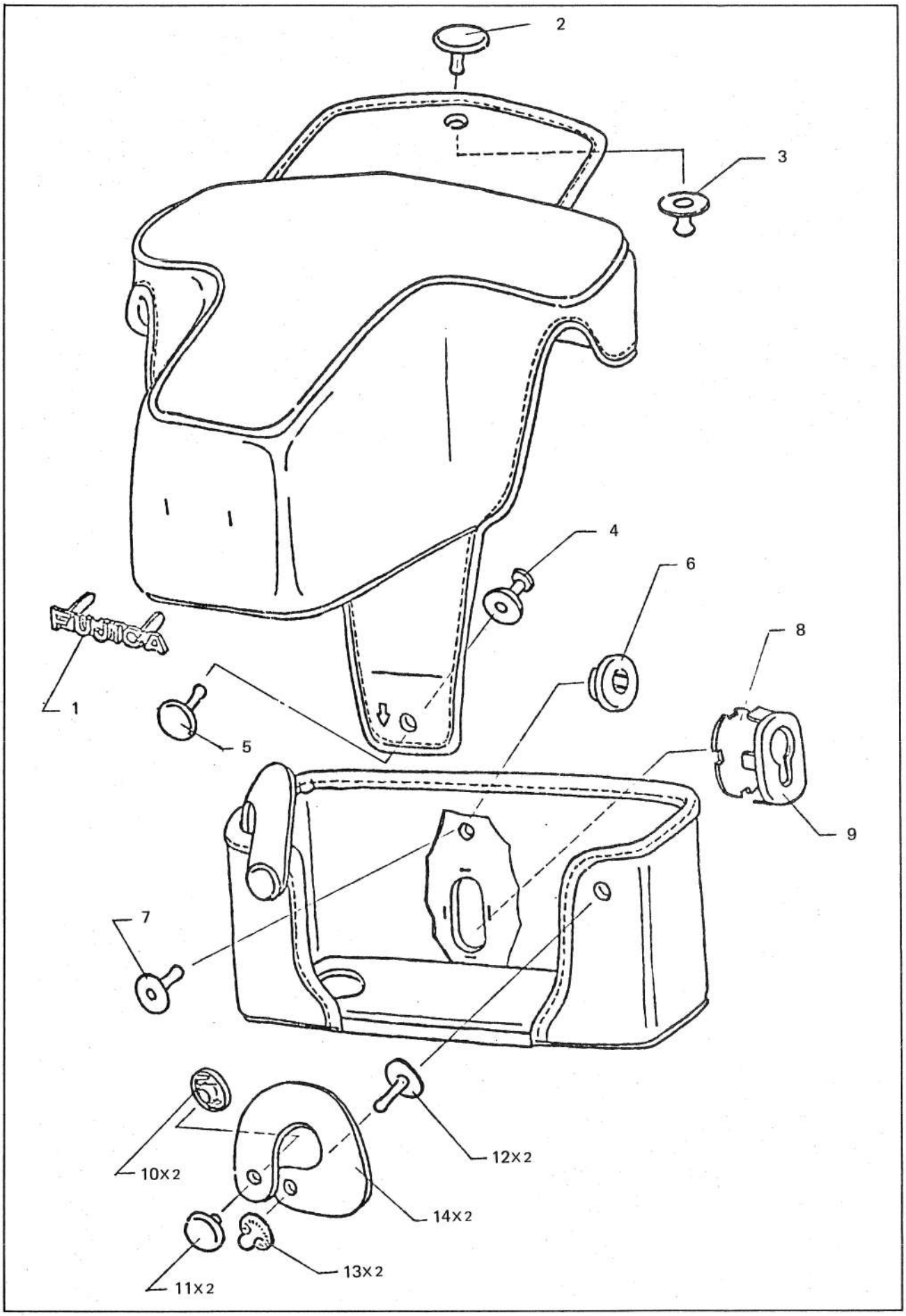
2
3
4
6
8
1
5
9
7
12X2
10X2
14X2
13X2
11X2

REF NO.	PART NO.	PART NAME	Q'TY	REMARKS
1	58B112140	FUJICA emblem	1	
2	17B2835780	Button (male)	1	
3	17B2835790	Button (female)	1	
4	17B2835810	Button (female)	1	
5	17B2835800	Button (male)	1	
6	17B2835830	Button (female)	1	
7	17B2835820	Button (male)	1	
8	55B2835850	Washer	1	
9	17B2835840	Hook (female)	1	
10	17B2835820	Hook (female)	2	
11	17B2835860	Hook (male)	2	
12	17B2835890	Button (male)	2	
13	17B2835880	Button (female)	2	
14	55B2835900	Leather	2	

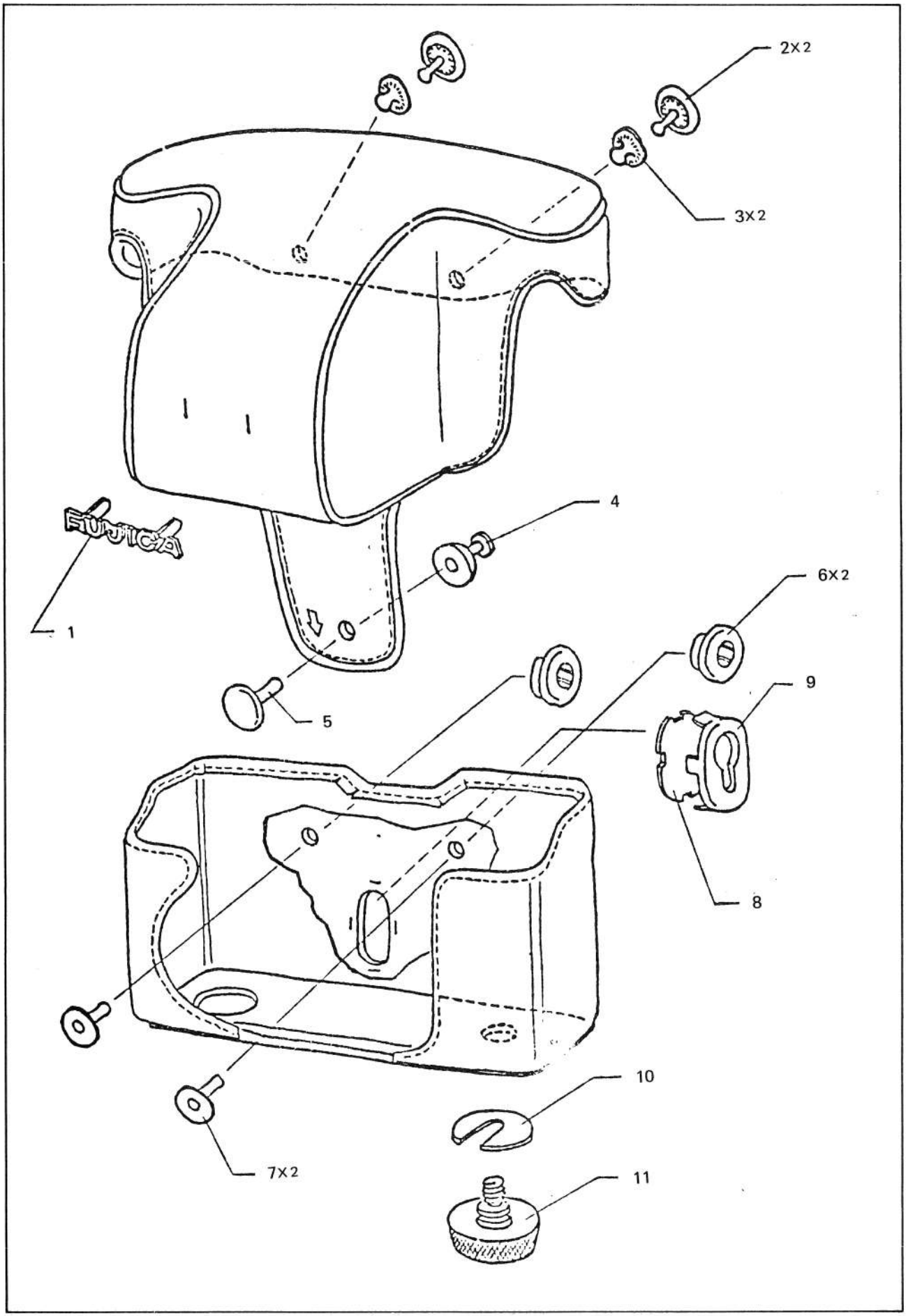
2X2
3X2
4
6X2
1
9
5
8
10
7X2
11

REF NO.	PART NO.	PART NAME	Q'TY	REMARKS
1	58B112140	FUJICA emblem	1	
2	17B2835780	Button (male)	2	
3	17B2835790	Button (female)	2	
4	17B2835810	Button (female)	1	
5	17B2835800	Button (male)	1	
6	17B2835830	Button (female)	2	
7	17B2835820	Button (male)	2	
8	55B2835850	Washer	1	
9	17B2835840	Hook (female)	1	
10	55B2835910	Spring washer	1	
11	53B2835920	Tripod socket	1	

Blank Page

REPAIR MANUAL
&
PARTS LIST

FOR

FUJICA AZ-1

(SUPPLEMENT)

This supplementary repair manual is to be filed with the repair manual for Fujica AZ - 1 issued August, 1977.
For those Fujica AZ - 1 which are equipped with amplifier assembly (KL83A - 5), this supplementary manual applies regarding III — 15, 16 and 17.
The modification on the amplifier assembly from KL83A - 4 to KL83A - 5 has been effected on those of serial number 208XXXX and thereafter.
Also included in this supplementary manual is "Troubleshooting for Electronic Shutter and Relative Systems for your better service.

FUJI FILM

FUJI PHOTO FILM CO., LTD.

26-30, Nishiazabu 2-Chome, Minato-ku, Tokyo 106, Japan

Blank Page

CONTENTS

I REASSEMBLY, REPAIR AND ADJUSTMENT 1

15. Electric circuit wiring 1

16. Adjustment of electrical system 3

16 — 1 Adjusting Vsf voltage 3

16 — 2 Checking AE lock operation 5

16 — 3 Adjusting exposure 7

16 — 4 Checking Sfl circuit (With the camera equipped with strobo for Fujica AZ - 1) 11

16 — 5 LED display 13

17. Method to check electrical parts for conditions 15

17 — 1 Amplifier assembly (8 — 1) (KL83A — 5) 15

17 — 2 LED assembly 27

17 — 3 Photocell (8 —2) 27

17 — 4 Magnet assembly (coil (5 — 73) and magnet circuit assembly (8 — 8)) 27

17 — 5 Aperture resistor (8 — 7) 29

17 — 6 Shutter resistor (8 — 6) 29

17 — 7 SN switch (8 — 5) 31

II PARTS LIST 34

III TROUBLESHOOTING FOR ELECTRONIC SHUTTER AND RELATIVE SYSTEMS 39

1. LED keeps lighting at the over - exposure side 39
2. LED keeps lighting at the under - exposure side 40
3. LED does not light 41
4. LED keeps lighting and does not go out 41
5. Some LEDs do not light 41
6. All LEDs light at the same time 41
7. AE lock does not function 42
8. The magnet does not hold (LED operates normally) 42
9. Under - exposure at EV7 (under - exposure at low luminosity) 42

8. Bottom cover assembly (1 – 77)

Loosen the two set screws (1 — 80), and remove the bottom cover assembly (1 — 77) carefully so as not to lose the insulator (1 — 76) and film rewind button (1 — 81).

NOTE: When removing the bottom cover assembly, be careful not to damage the fitting edge against the plate (7 — 77).

9. Lens mount assembly (2 – 62)

a. Peel off the leathers (1 — 75 and 1 — 82) after solving Pliobond with solvent.

b. Set the self - timer to a half way of the full stroke.

c. Remove the four set screws (2 — 99).

d. Remove the lens mount assembly (2 — 62) forward with care exercised to keep the coupling (2 — 97) from losing.

10. Mirror does not come down 42

11. Regardless of shutter speed selection, the shutter is always released in 1/1000 sec. 42

12. When a 1/60 sec. or faster shutter speed is selected at LV11, F5.6, ASA100, the shutter releases always in 1/1000 sec., or when a 1/60 sec. or slower shutter speed is selected, an under exposure occurs 43

13. Regardless of shutter speed selection, the shutter is always released in 1/2 sec. 43

14. When a strobo for Fujica AZ - 1 is mounted on the camera, LED does not light at "60" 43

15. When a strobo for Fujica AZ - 1 is mounted on the camera, correct shutter speed is not provided 43

16. When a strobo for Fujica AZ - 1 is mounted on the camera, correct exposure is not provided 43

17. Exposure fluctuates 44

18. Over or under - exposure occurs at high luminosity (LV15) 44

19. Fujica Auto Winder does not operate 45

Blank Page

I REASSEMBLY, REPAIR AND ADJUSTMENT

15. Electric circuit wiring

- Connect wires as indicated on the wiring diagram.
- Perform preliminary soldering on lead wires sufficiently and reduce volume of solder picked up on the soldering iron so that no excessive solder remains on the terminals of the circuit pattern.
  When the circuit is dirty with flux, clean it with alcohol.
- Carefully control temperature of the soldering iron when soldering.
- Neatly align lead wires so that none of them is held by other parts and no electrical part is held by the lead wires.
- Be sure to remove slag of solder.
- When a solder tube having flux in it has been used, be sure to clean the soldered portion and its surroundings with alcohol thoroughly.

Fig. 62 (S)

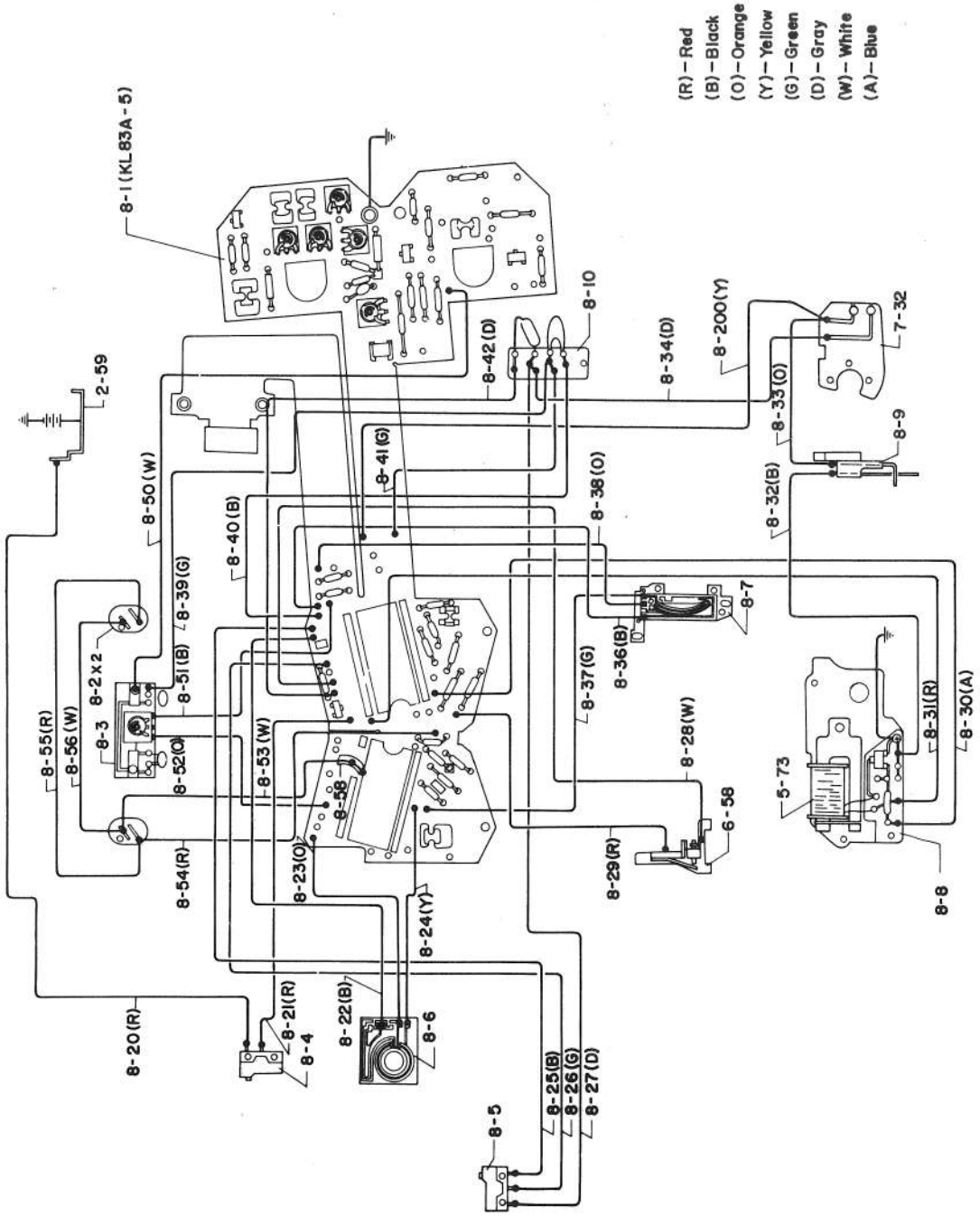
(R)-Red
(B)-Black
(O)-Orange
(Y)-Yellow
(G)-Green
(D)-Gray
(W)-White
(A)-Blue
8-1 (KL83A-5)
8-10
8-42(D)
8-34(D)
8-200(Y)
7-32
2-59
8-33(O)
8-9
8-41(G)
8-38(O)
8-32(B)
8-50(W)
8-40(B)
8-39(G)
8-7
8-36(B)
8-2x2
8-51(B)
8-37(G)
8-30(A)
8-31(R)
8-3
8-55(R)
8-56(W)
8-52(O)
8-53(W)
8-28(W)
5-73
8-58
6-58
8-54(R)
8-23(O)
8-29(R)
8-8
8-24(Y)
8-20(R)
8-21(R)
8-4
8-22(B)
8-6
8-25(B)
8-26(G)
8-27(D)
8-5

16. Adjustment of electrical system

16 — 1 Adjusting Vsf voltage

- Load new batteries or apply DC 4.0V.
- Mount an F1.4/50 mm lens on the camera, and set film speed and aperture respectively to ASA100 and F5.6.
- Turn on the SM and SN switches (condition under which the shutter release button is depressed in a half way), and adjust the variable resistor (8 — 133) so that voltage across the camera body (ground) and terminal "a" shown in Fig. 63(S) is 1300±30 mV.
  To measure voltage use a digital voltmeter (impedance: 100 MΩ or more) as shown on the Fig. 63(S).
- When voltage across the camera body and termianl "a" cannot be adjusted as described above:
  - a) Check the printed circuit board assembly (8 — 3) for soldering of the parts and breaking of the lead wires.
  - b) Check the lead wires (8 — 52, 8 — 51, 8 — 39, 8 — 50 and 8 — 41) extended from the printed circuit board assembly (8 — 3) to the amplifier assembly (8 — 1) for soldering.
  - c) As the result of checkings a) and b) above, when the parts and lead wires are normal, check LEDs. When LEDs do not work normally, refer to Sections 1 through 7 of the attached TROUBLESHOOTING FOR ELECTRONIC SHUTTER AND RELATIVE SYSTEMS for repairing.

Fig. 63 (S)

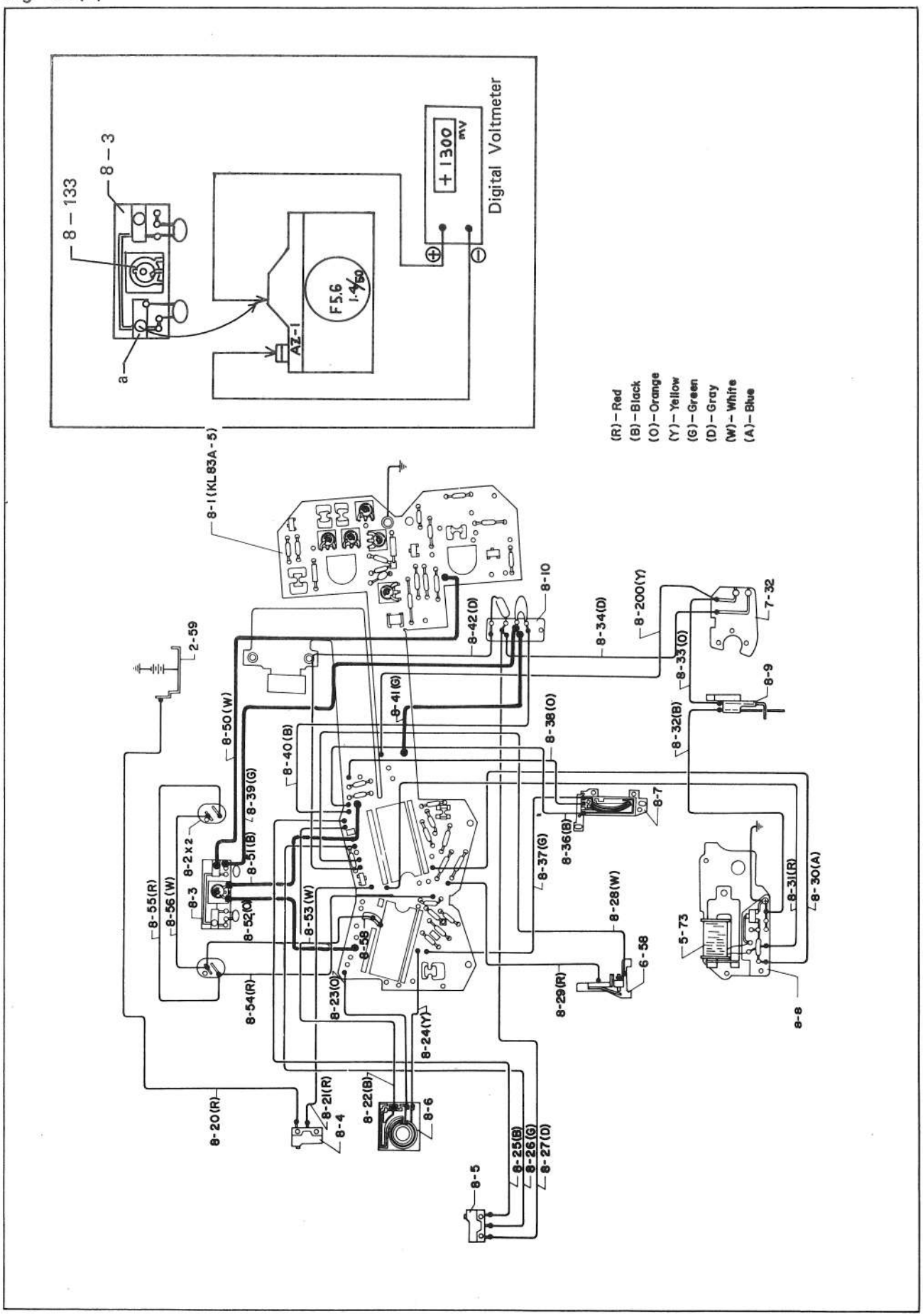
8-133
8-3
a
AZ-1
F5.6
1/60
+1300
mV
Digital Voltmeter
(R)-Red
(B)-Black
(O)-Orange
(Y)-Yellow
(G)-Green
(D)-Gray
(W)-White
(A)-Blue
8-1(KL83A-5)
8-10
8-42(D)
8-34(D)
8-200(Y)
7-32
8-33(O)
8-9
8-32(B)
8-38(O)
8-41(G)
8-50(W)
8-40(B)
8-39(G)
2-59
8-7
8-36(B)
8-37(G)
8-2x2
8-51(B)
8-3
8-55(R)
8-56(W)
8-52(O)
8-53(W)
8-58
8-28(W)
8-31(R)
8-30(A)
5-73
6-58
8-29(R)
8-8
8-54(R)
8-23(O)
8-24(Y)
8-20(R)
8-21(R)
8-4
8-22(B)
8-6
8-25(B)
8-26(G)
8-27(D)
8-5

16 — 2 Checking AE lock operation

a. With the shutter release button depressed in a half way (with the SM and SN switches turned on), look into the viewfinder to insure that LED display does not change even if brightness of a light source is changed. When LED display changes, the AE lock circuit is abnormal. Measure voltage at the amplifier terminal ⓗ. When the measured voltage is 0.2V or less, the AE lock circuit is normal. When the measured voltage is higher than 0.2V, the SA switch (8 — 9) and electrical parts on the amplifier circuit assembly (8 — 1) are abnormal or disconnected due to poor soldering. The relative parts are indicated by asterisk (※) in Fig. 64(S).

b. Make sure that LED goes out when the shutter release button is freed from depression (SN swtich is turned off). Depress the shutter release button again in a half way and make sure that the appropriate LED lights accordingly with brightness of the light source.
When the LED does not go out or does not light correctly, the SN switch (8 — 5) ON - OFF operation is abnormal or the transistor circuit of the amplifier assembly (8 — 1) is abnormal. Check the transistors and surrounding circuits for a disconnection or short - circuit due to a poor soldering. The relative parts are indicated by asterisk (☆) in the Fig. 64(S).

Fig. 64 (S)

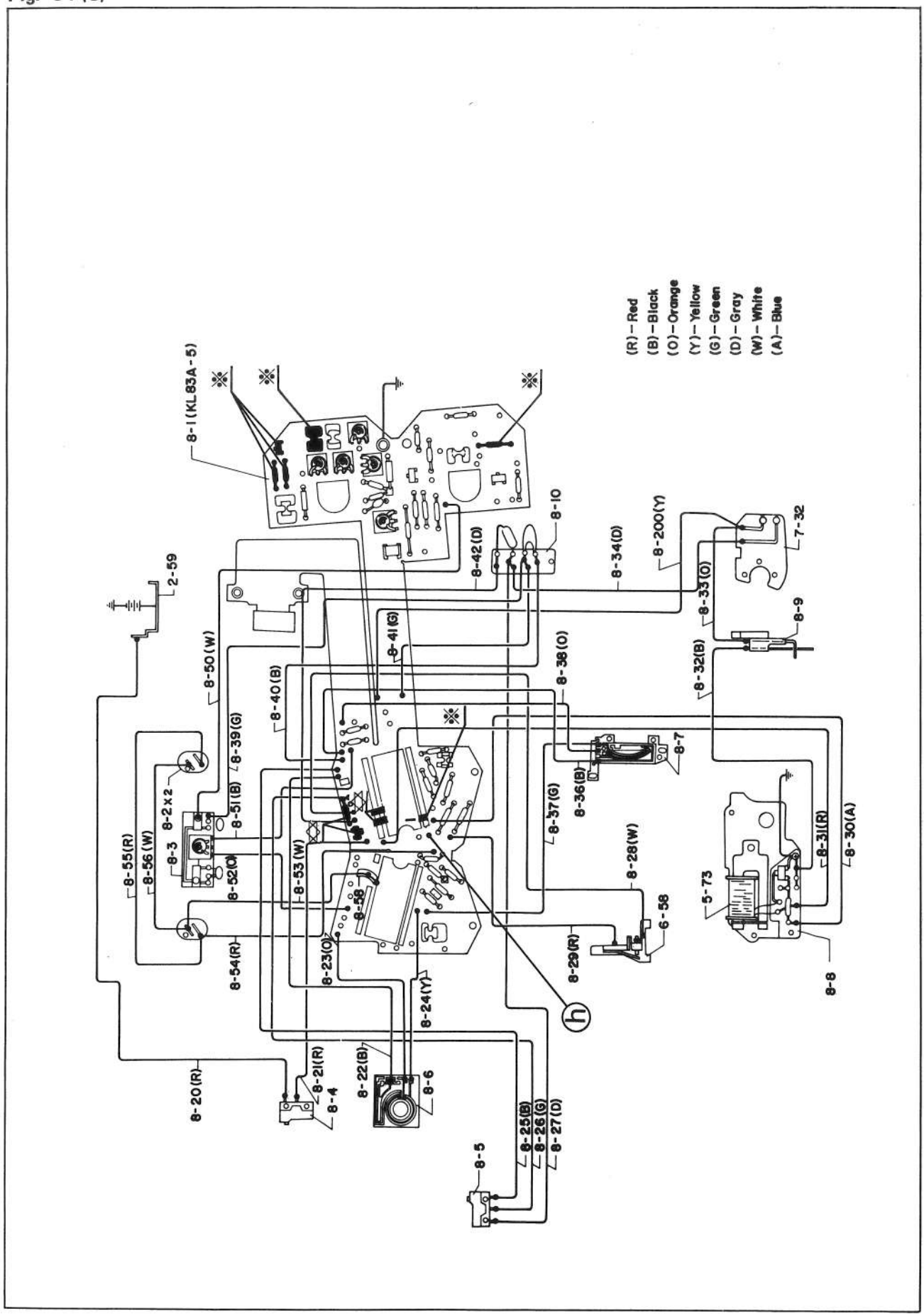
(R)-Red
(B)-Black
(O)-Orange
(Y)-Yellow
(G)-Green
(D)-Gray
(W)-White
(A)-Blue
8-1(KL83A-5)
2-59
8-50(W)
8-40(B)
8-39(G)
8-2×2
8-3
8-51(B)
8-52(O)
8-55(R)
8-56(W)
8-54(R)
8-53(W)
8-23(O)
8-58
8-20(R)
8-21(R)
8-4
8-22(B)
8-6
8-24(Y)
8-5
8-25(B)
8-26(G)
8-27(D)
8-42(D)
8-41(G)
8-10
8-34(D)
8-200(Y)
8-33(O)
7-32
8-9
8-32(B)
8-38(O)
8-7
8-36(B)
8-37(G)
8-28(W)
8-29(R)
6-58
5-73
8-31(R)
8-30(A)
8-8

16 — 3 Adjusting exposure

LED light-up position and exposure are adjusted at the same time.
For example, when LED 500 displays, 1/500 second shutter speed signal must be delivered out at the magnet assembly. Thus, when an LED display does not agree with actual exposure, the cause exists in the time between turn off of the SC switch and starting of the 1st blind traveling and in the time between turn off the magnet and ending of the 2nd blind traveling.

a. Mount an EBC Fujinon F1.8/55 mm lens on the camera body, and set the camera as indicated below:

1)	Shutter speed selector dial:	"AUTO" "ASA100"
2)	Aperture selector:	F5.6
3)	Source voltage:	DC 4.0V (Three G13/1.5V batteries will provide this voltage)

NOTE:
- ○ Be sure to mount a lens having a notch for full aperture metering.
- ○ A lens having no notch for full aperture metering is for stopped-down aperture metering. Use a lens of this kind with the stop-down aperture button depressed so that the aperture is stopped down to the minimum.
- ○ With a lens having a notch for full aperture metering, stopped-down aperture metering cannot be performed.

b. Face the camera toward a light source of LV11 (718 rlx) and adjust the variable resistor (8 — 68) so that luminosity at the film plane is 0.08 lx-sec. Make sure that the LED seen in the viewfinder indicates 60.

NOTE: Be sure to adjust the variable resistor with the top cover installed, and perform the adjustment through the opening provided for the adjustment with a special screw driver designed for this purpose.

c. Check exposures at other light values.

Fig. 65 (S)

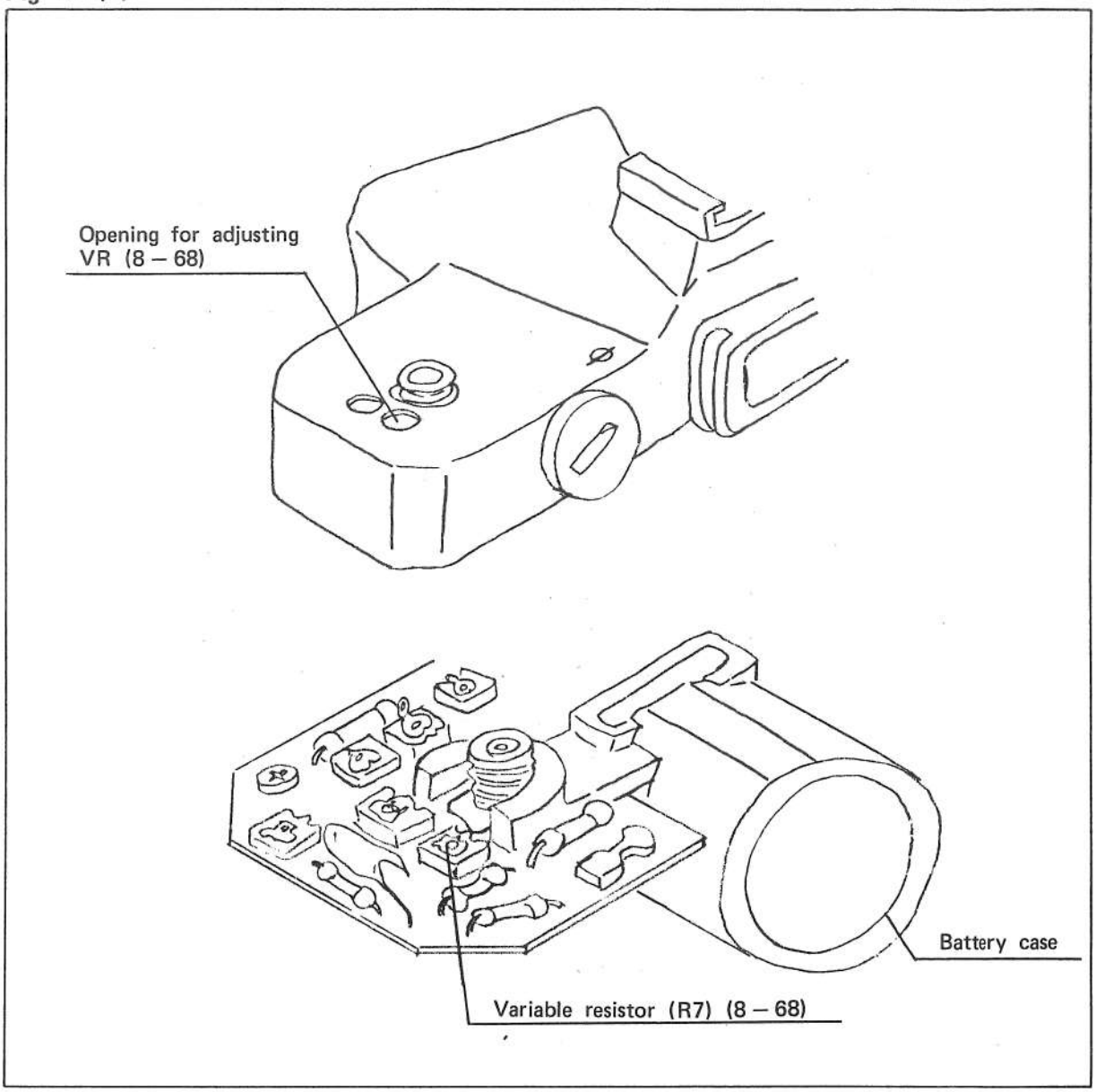

ASA 100 F:5.6

LV (luminosity)	Exposure			Indication seen in the viewfinder		
	Standard	Permissible tolerance		Standard	Permissible tolerance	
LV7 (89.7rlx)	0.08lx – sec	±1.0 EV	0.04 ~ 0.16 lx - sec	2 – 15	±1.0 EV	2 – 15
LV11 (718 rlx)	0.08lx – sec	±1.0 EV	0.04 ~ 0.16 lx - sec	60	±1.0EV	30 – 125
LV14 (5744rlx)	0.08lx – sec	±1.0EV	0.04 ~ 0.16 lx - sec	500	±1.0 EV	250 – 1000
LV15 (11488rlx)	0.08lx – sec	±1.0EV	0.04 ~ 0.16 lx - sec	1000	±1.0 EV	500 – Blink

Fig. 7

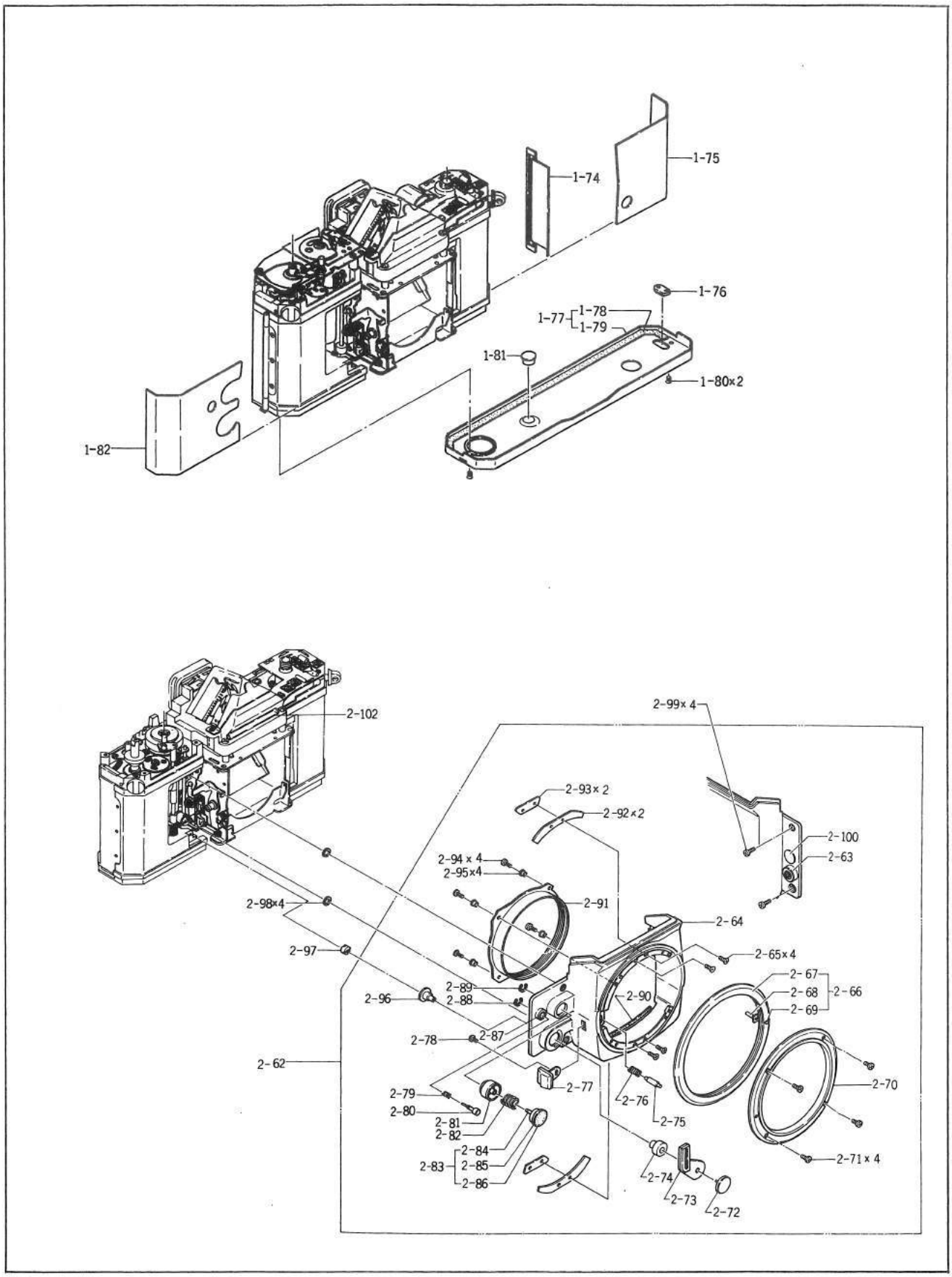
1-75
1-74
1-76
1-77
1-78
1-79
1-81
1-80×2
1-82
2-102
2-99×4
2-93×2
2-92×2
2-100
2-63
2-94×4
2-95×4
2-91
2-98×4
2-64
2-97
2-65×4
2-67
2-68
2-66
2-69
2-89
2-88
2-96
2-90
2-78
2-87
2-62
2-77
2-70
2-79
2-80
2-76
2-81
2-82
2-75
2-84
2-83
2-85
2-86
2-71×4
2-74
2-73
2-72

d. Adjusting exposures for LV14 and LV15

(When exposures for LV14 and LV15 are under or over against those for LV11 and LV7)

First, make sure that both exposures for LV14 and LV15 are under or over against those for LV11 and LV7. When exposure for LV is under against those for LV11 and LV7 but exposure for LV15 is over against those for LV11 and LV7, or when exposure for LV14 is over against those for LV11 and LV7 but exposure for LV15 is under against those for LV11 and LV7, reduce gap between the 2nd blind stopper assembly (5 — 63) and hook lever (5 — 91) so that both exposures for LV14 and LV15 are under or over against those for LV11 and LV7.

1) When exposures for LV14 and LV15 are under against those for LV11 and LV7, select a suitable capacitor (8 — 123) from those indicated below and connect it to the terminals shown in Fig. 67(S).

When about 1/2 EV under:	Capacitor (0.01μF)
When about 1 EV under:	Capacitor (0.022μF)
When about 2 EV under:	Capacitor (0.047μF)

NOTE: Exercise care for polarity of the capacitor (8 — 123) pin. The longer pin (The pin in the right side when ④ is faced to your side) is the positive (+) pin as indicated in Table 4(S).

2) When exposures for LV14 and LV15 are over against those for LV11 and LV7, take the following actions :

- Remove the capacitor (8 — 123), if used.
- Increase force of the spring (5 — 94).
- Clean the attracted surface of the core (5 — 74).
- Check the lever (5 — 91) for motion.
- Make sure that blind velocity is 12 msec.
- When the over-exposure cannot be corrected through the above actions, check the 1st and 2nd blinds for their positions. (Refer to III — 2 — 4 of the Repair Manual).

Fig. 66 (S)

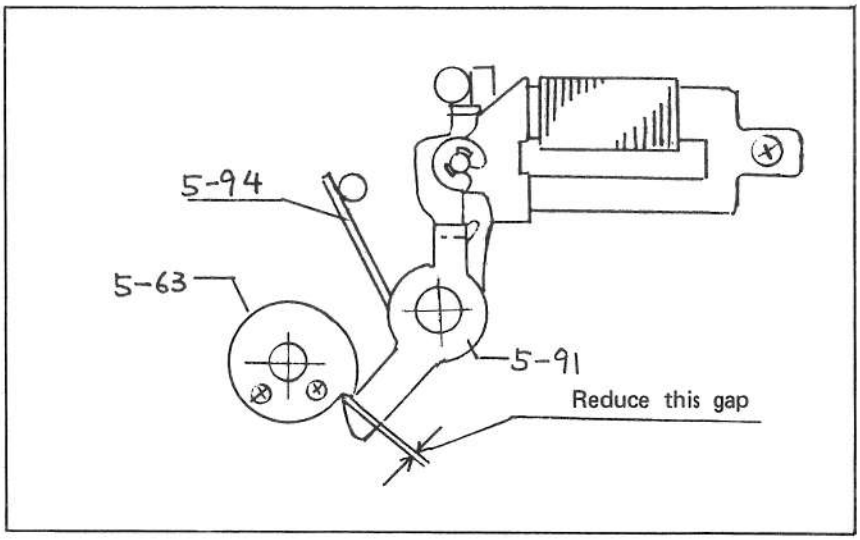

Fig. 67 (S)

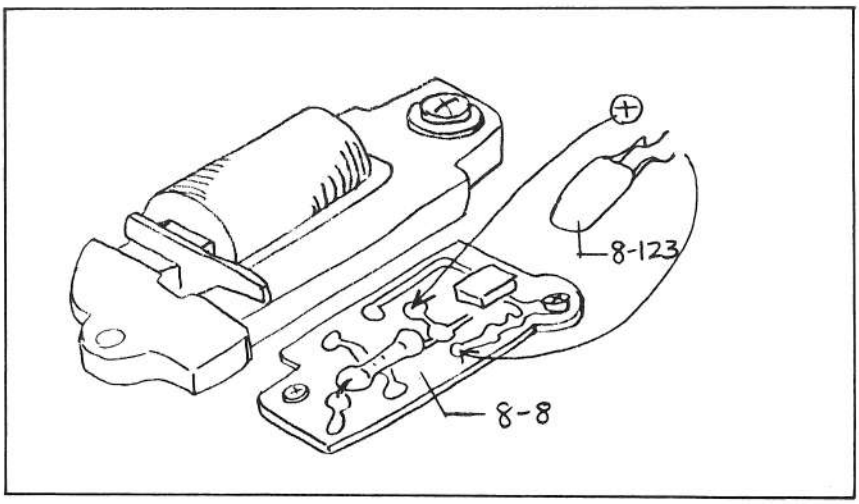

Table 4 (S)

Color identification for capacitor

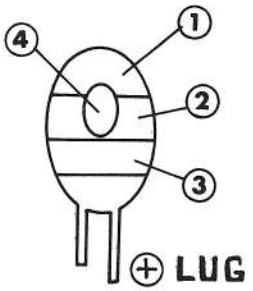

The longer pin (The pin in the right side when (4) is faced to your side) is the positive (+) pin.

Color	Static capacity (PF)			Rated voltage
	①	②	③	④
Black	0	0		10
Brown	1	1	X10	
Red	2	2	$X10^2$	
Orange	3	3	$X10^3$	
Yellow	4	4	$X10^4$	6.3
Green	5	5	$X10^5$	16
Blue	6	6	$X10^6$	20
Purple	7	7	$X10^7$	
Gray	8	8	$X10^8$	25
White	9	9	$X10^9$	3.15
Pink				35

16 — 4 Checking Sfl circuit (With the camera equipped with strobo for Fujica AZ - 1)

- With a strobo installed on the hot shoe, look into the viewfinder to insure that LED lights at 60. Further, measure shutter speed with a shutter tester to insure that shutter speed is 1/60 sec. (11.4 to 21.3 msec) under this condition. (In stead of mounting a strobo on the hot shoe, the hot shoe terminal may be stort - circuited with the accessory shoe (ground).
- When condition is abnormal, take the following actions :

  a) Check the SC switch (6 — 58), printed circuit board assemb ly (8 — 3) and pins (1 — 36) to insure that they are in a proper contact.

  b) Check the diode (8 — 209) and resistors (8 — 81, 8 — 101, 8 — 100, 8 — 102 and 8 — 210) for their soldered conditions.

  c) Check the transistors (8 — 103 and 8 — 215) for their soldered conditions.

  d) Check the terminals of the LED (8 — 61) for the soldered condition.

  e) Check the pins (No. 5 through 12 and 28) of the IC (HA 16501P) for their soldered conditions.

Fig. 68 (S)

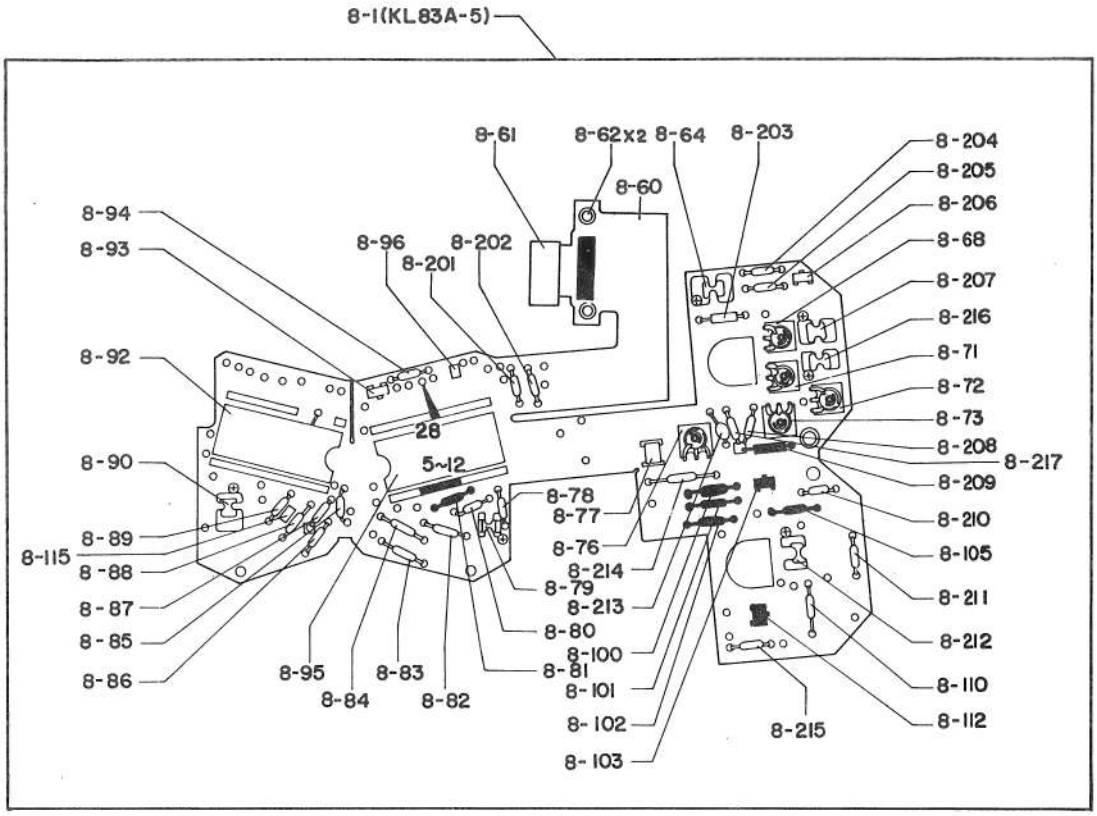
8-1(KL83A-5)
8-61
8-62x2
8-64
8-203
8-60
8-204
8-205
8-206
8-68
8-207
8-216
8-71
8-72
8-73
8-208
8-217
8-209
8-210
8-105
8-211
8-212
8-110
8-112
8-215
8-94
8-93
8-96
8-202
8-201
8-92
28
5~12
8-90
8-78
8-77
8-76
8-214
8-79
8-213
8-80
8-100
8-81
8-101
8-102
8-103
8-89
8-115
8-88
8-87
8-85
8-86
8-95
8-84
8-83
8-82

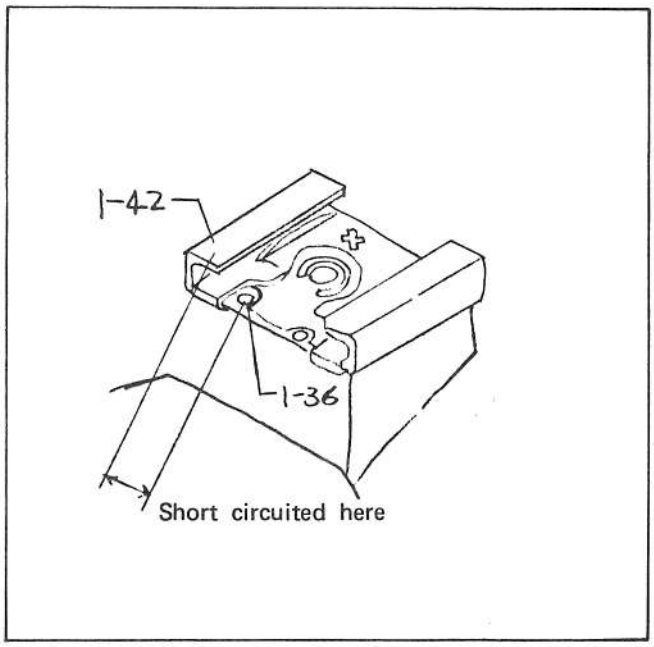
1-42
1-36
Short circuited here

16 — 5 LED display

- Over or under exposure warning
  When a selected exposure is +1/3 EV over the "1000" point or when a selected exposure is −2/3 EV under the "2" point, the LED begins to blink in 8 Hz frequency.

- Low voltage warning
  When voltage of the battery drops to the range from 3.4 to 3.6V, the LED begins to blink in 16 Hz frequency. When voltage of the battery further drops to 3.2V or below, the LED does not blink and correct exposure will not be provided.
  When the LED does not blink for low voltage warning, take the following actions :

  a) Check the resistors (8 — 105 and 8 — 211) for their soldered conditions.
  b) Check pins (No. 15 and 16) of the IC (HA 16502P) for their soldered conditions.

Fig. 69 (S)

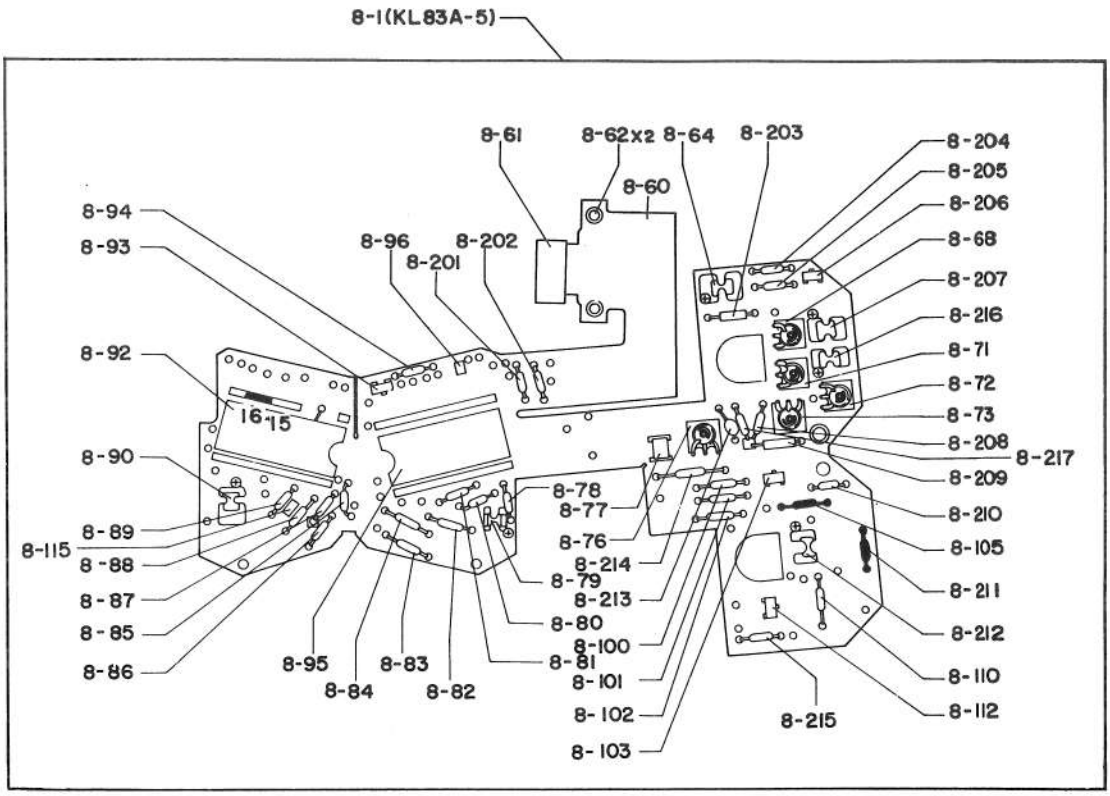
8-1(KL83A-5)
8-61
8-62x2
8-64
8-203
8-60
8-204
8-205
8-206
8-68
8-207
8-216
8-71
8-72
8-73
8-208
8-217
8-209
8-210
8-105
8-211
8-212
8-110
8-112
8-215
8-94
8-93
8-96
8-202
8-201
8-92
16
15
8-90
8-89
8-115
8-88
8-87
8-85
8-86
8-95
8-84
8-83
8-82
8-78
8-77
8-76
8-214
8-79
8-213
8-80
8-100
8-81
8-101
8-102
8-103

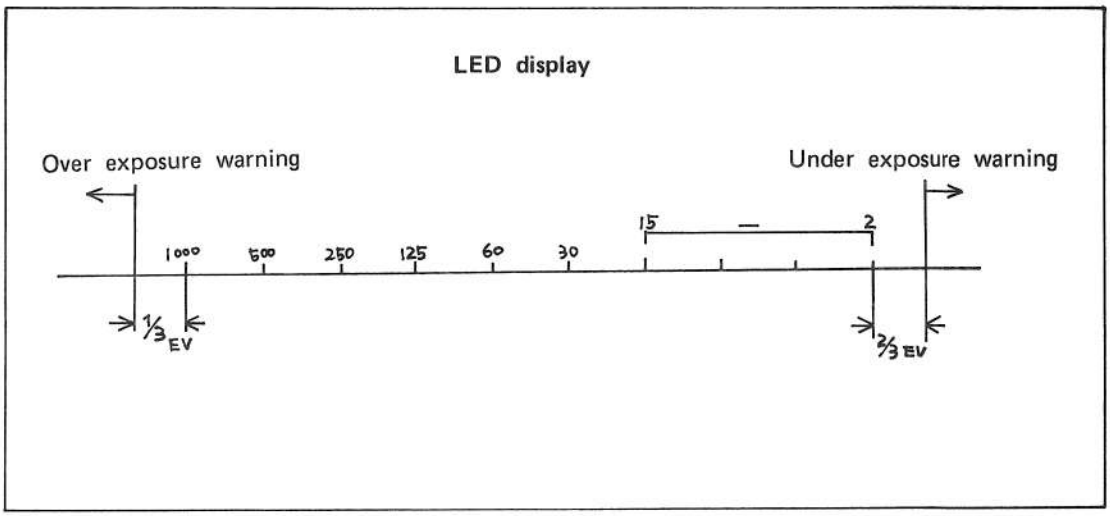
LED display
Over exposure warning
Under exposure warning
1000
500
250
125
60
30
15
2
1/3 EV
2/3 EV

17. Method to check electrical parts for conditions

17 — 1 Amplifier assembly (8 — 1) (KL83A — 5)

a. Check each point for voltage.

b. When voltage at any point is abnormal, check the relative parts for connection (soldering) and wiring, and when the parts and wiring are normal, replace the amplifier assembly (8 —1) with a new one.

c. Voltage at each terminal indicated on the following table is voltage against the camera body (ground, negative polarity) with DC 4.0V applied (with the camera loaded with new batteries) and with the SN switch (8 — 5) turned on.

Terminal	Voltage	
ⓐ (VS)	50 to 300 mV	F5.6 (1.8/55 mm lens) ASA100, LV10 to 12
ⓑ (Vref)	2500±10 mV	Constant voltage
ⓓ (Ph out)	△40 mV	When input light is changed, voltage must change △ 40 mV per EV.
ⓔ (Sf out)	2400±50 mV	At F1.8 (1.8/55 mm lens), ASA100
	△ 40 mV	Voltage must change △ 40 mV per EV when S-value and F-value are changed.
ⓕ (Vt out)	The center voltage should be approximately 1800 mV	Adjusted to 1200 mV to 2400 mV by coinciding it with the constant of the logic circuit.
ⓖ (β)	2V or higher	With 5.1 KΩ loaded, voltage should be 2V or higher before releasing the shutter.
	0.2V or less	With 5.1 KΩ loaded, voltage should be 0.2V or less within 17 to 19 msec. after releasing the shutter

Fig. 70 (S) – 1

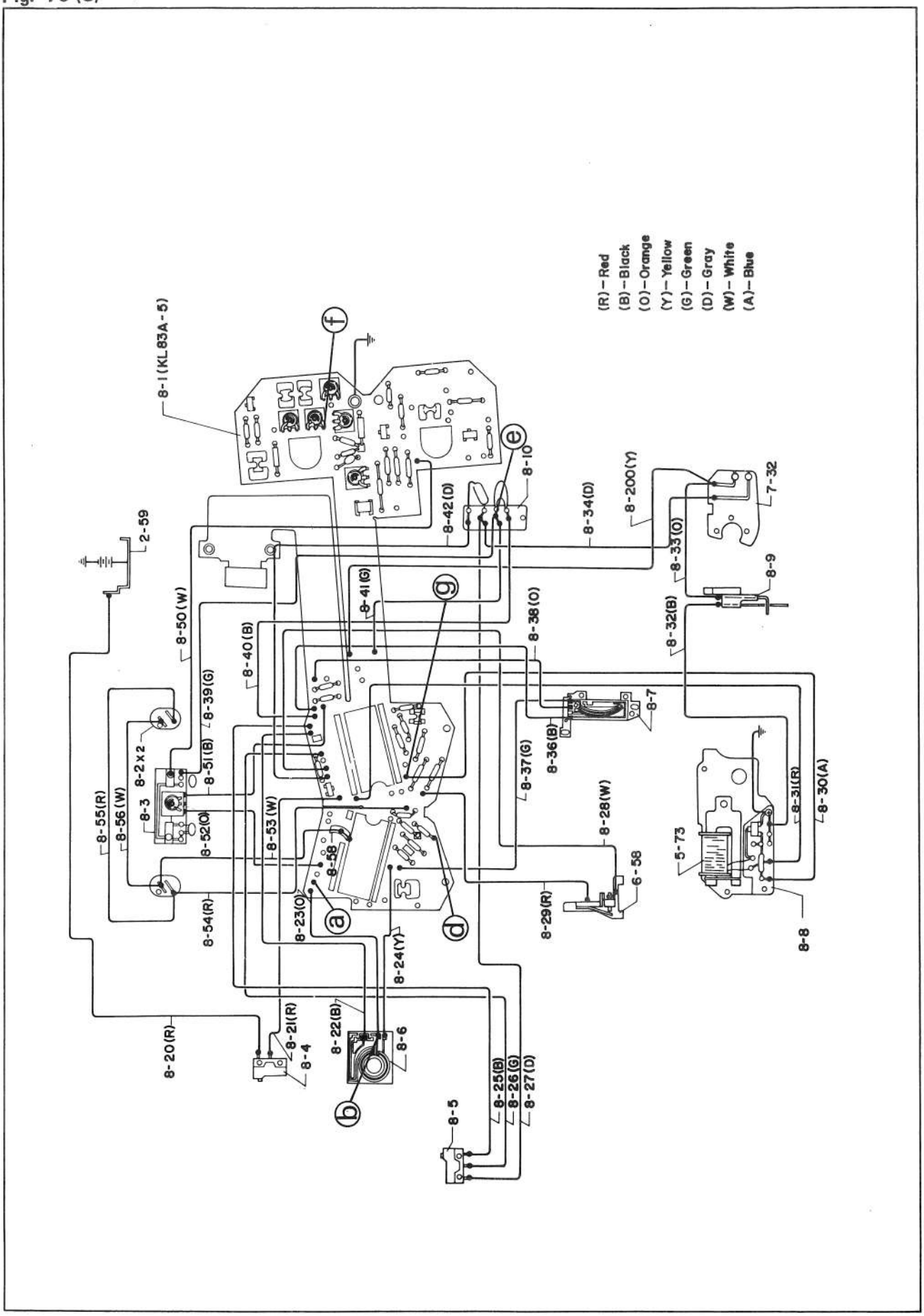
(R) – Red
(B) – Black
(O) – Orange
(Y) – Yellow
(G) – Green
(D) – Gray
(W) – White
(A) – Blue
8-1 (KL83A-5)
2-59
8-50 (W)
8-40 (B)
8-39 (G)
8-2 x 2
8-3
8-51 (B)
8-52 (O)
8-55 (R)
8-56 (W)
8-54 (R)
8-53 (W)
8-58
8-23 (O)
8-41 (G)
8-42 (D)
8-10
8-34 (D)
8-200 (Y)
8-33 (O)
7-32
8-9
8-32 (B)
8-38 (O)
8-7
8-36 (B)
8-37 (G)
8-28 (W)
8-29 (R)
6-58
5-73
8-31 (R)
8-30 (A)
8-8
8-24 (Y)
8-20 (R)
8-21 (R)
8-4
8-22 (B)
8-6
8-25 (B)
8-26 (G)
8-27 (D)
8-5
a
b
d
e
f
g

The parts relative to voltage (Vs) at terminal ⓐ

Fig. 70 (S) – 2

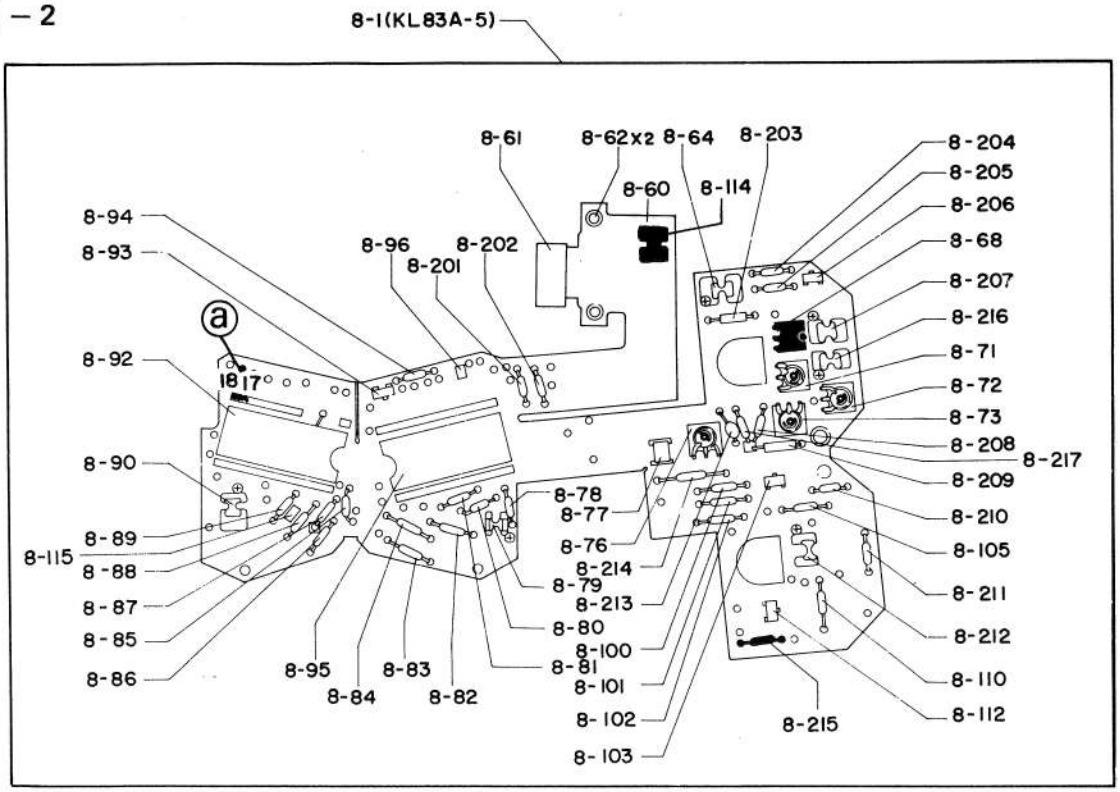

The parts relative to voltage (Vref) at terminal ⓑ

Fig. 70 (S) – 3

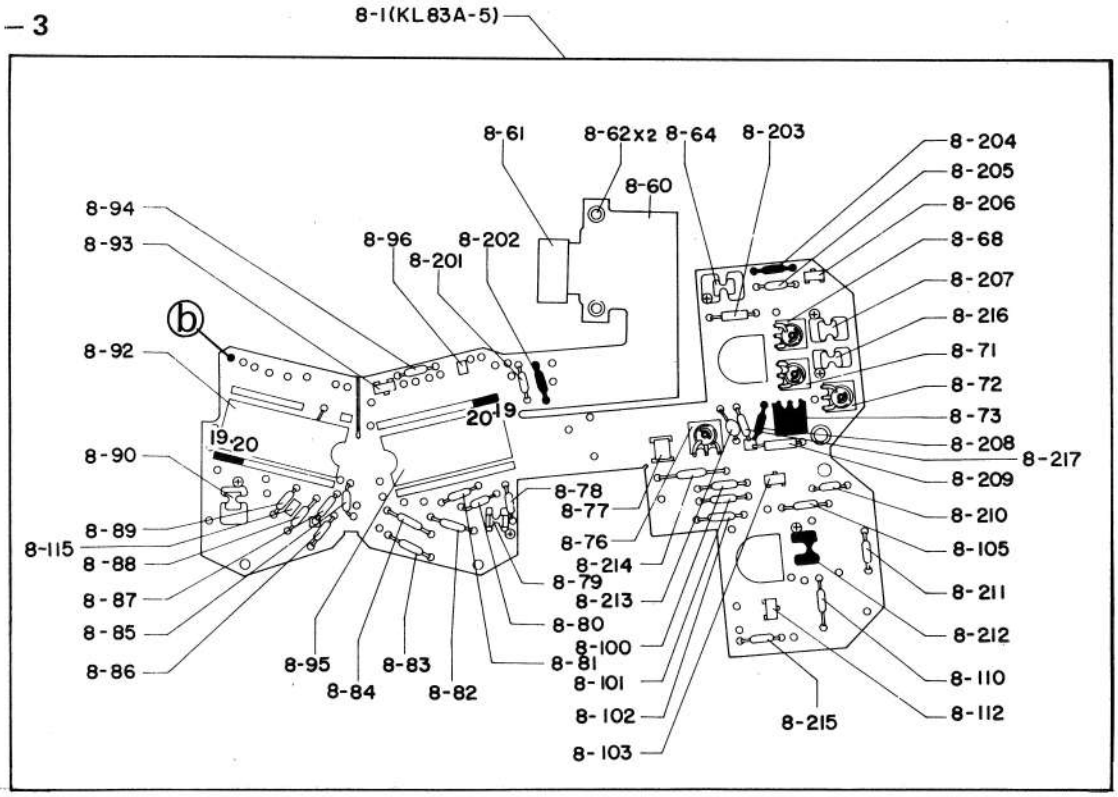

The parts relative to voltage (Ph out) at terminal ⓓ

Fig. 70 (S) – 4

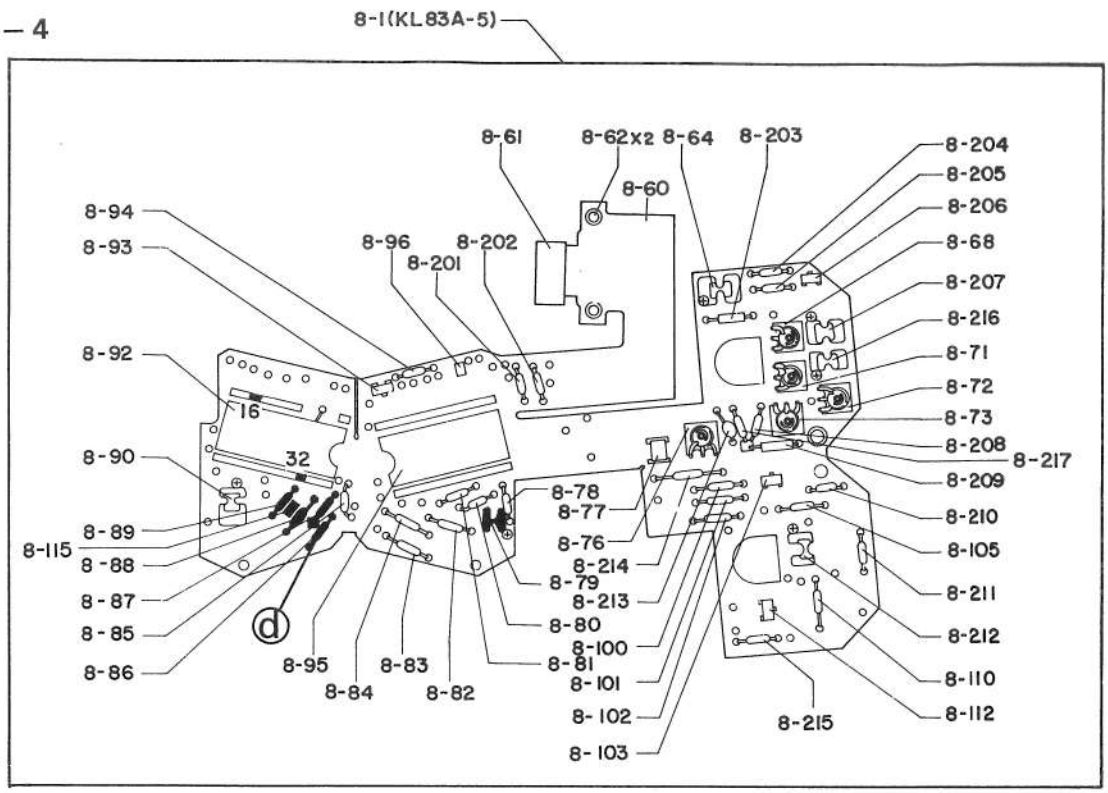

The parts relative to voltage (Sf out) at terminal ⓔ

Fig. 70 (S) – 5

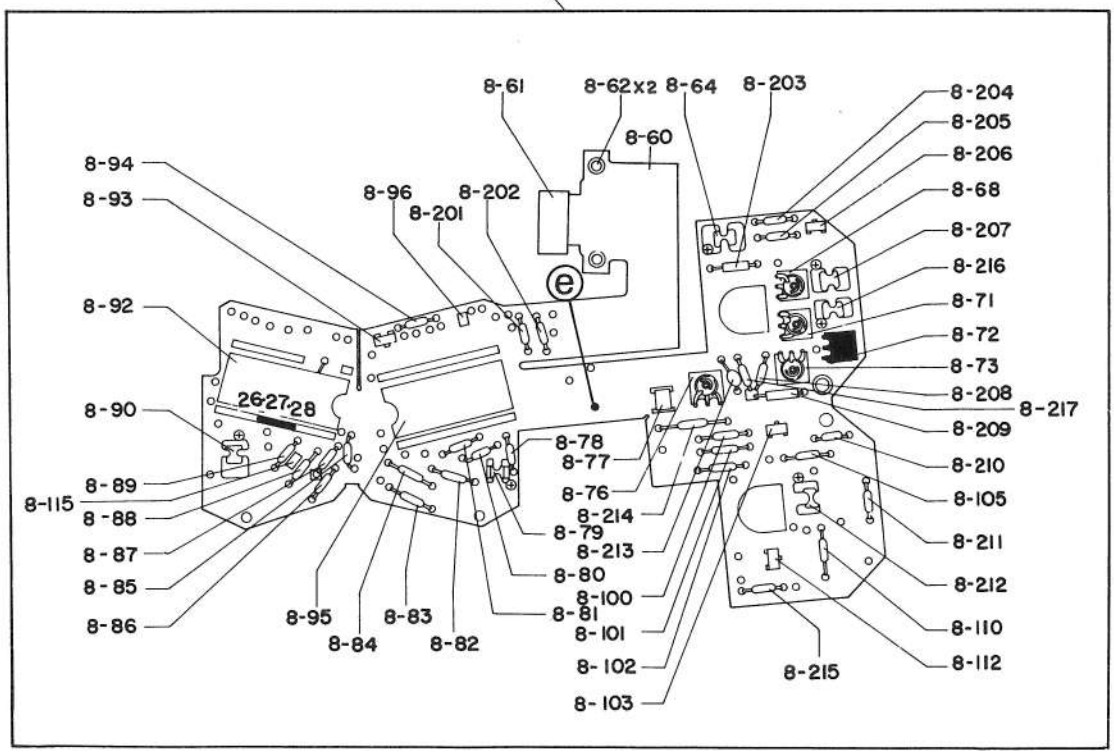

10. Self - timer assembly (3 – 41)

a. Solve the Pliobond (used to lock the threads in the joint between the shutter release shaft assembly (3 — 52) and lower shutter release shaft (3 — 43)) with solvent (ketone).

b. Hold the lower shutter release shaft (3 — 43), and turn the shutter release shaft assembly (3 — 52) counterclockwise to separate it from the lower shutter release shaft.

c. Remove the two set screws (3 — 40), and remove the self - timer assembly (3 — 41).

11. Synchro - contact plate assembly (3 – 64) and stopper plate assembly (3 – 77)

a. Disconnect the lead wires (3 — 82 and 3 — 83).

b. Remove the set screws (3 — 70 and 3 — 71).

c. Remove the synchro - contact plate assembly (3 — 64) carefully so as not to lose the collar (3 — 72).

d. Remove the set screw (3 — 73).

e. Remove the spring (3 — 74), insulation collar (3 — 75) and washer (3 — 76).

f. Remove the spring (3 — 80) carefully so as not to deform it.

NOTE: Unhook the spring at the screw (7 — 16).

g. Remove the stopper plate assembly (3 — 77) carefully.

The parts relative to voltage (V_T out) at terminal ⓕ

Fig. 70 (S) – 6

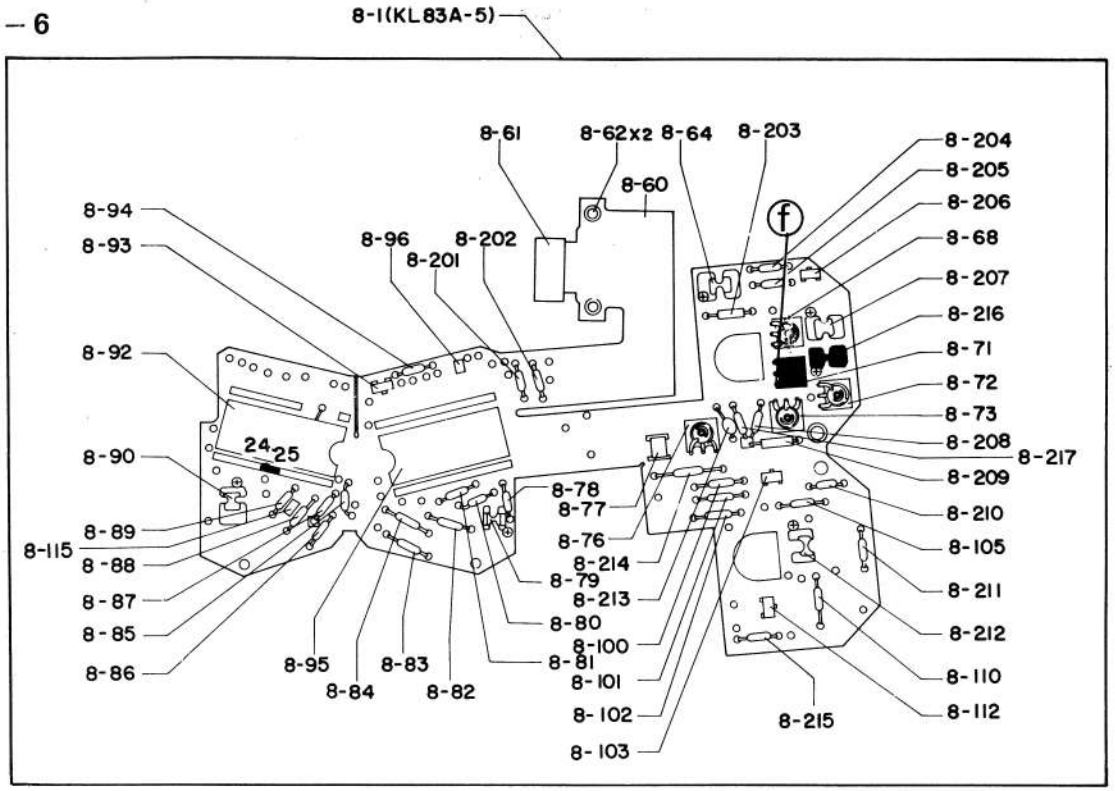

IC Pin. No.

Fig. 70 (S) – 7

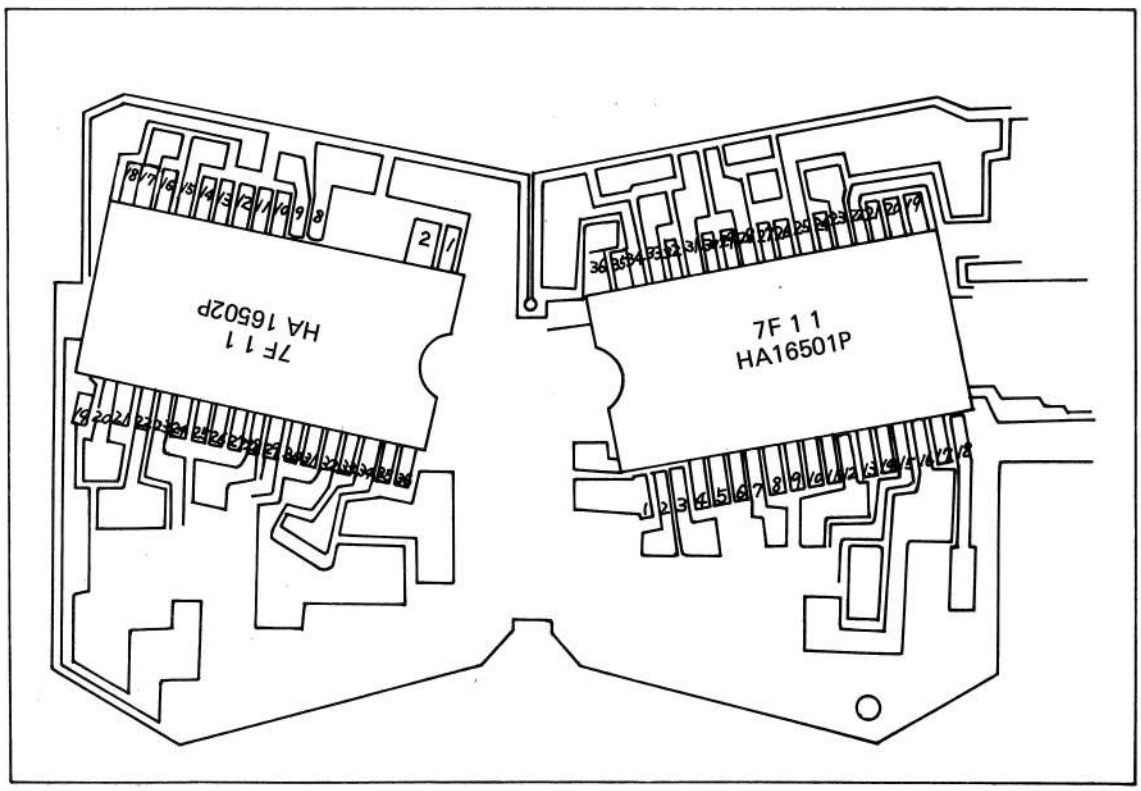

The parts relative to AEL circuit

Fig. 70 (S) – 8

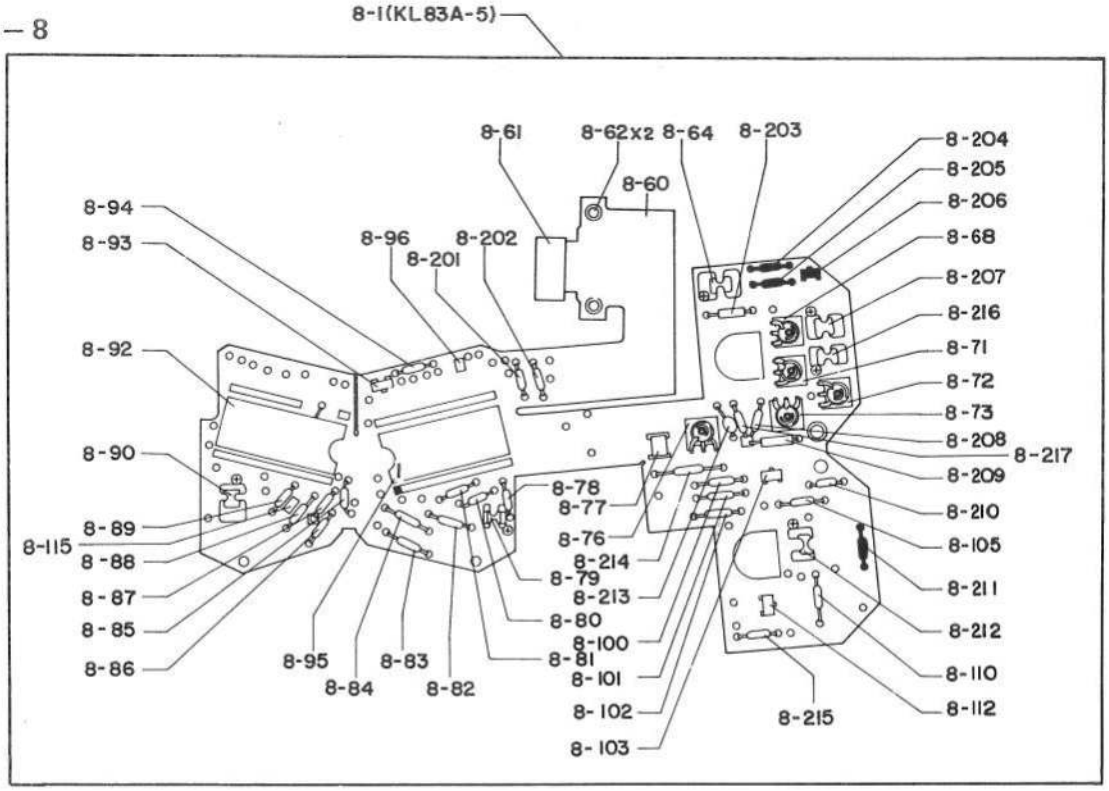

The parts relative to Vcc GND circuit

Fig. 70 (S) – 9

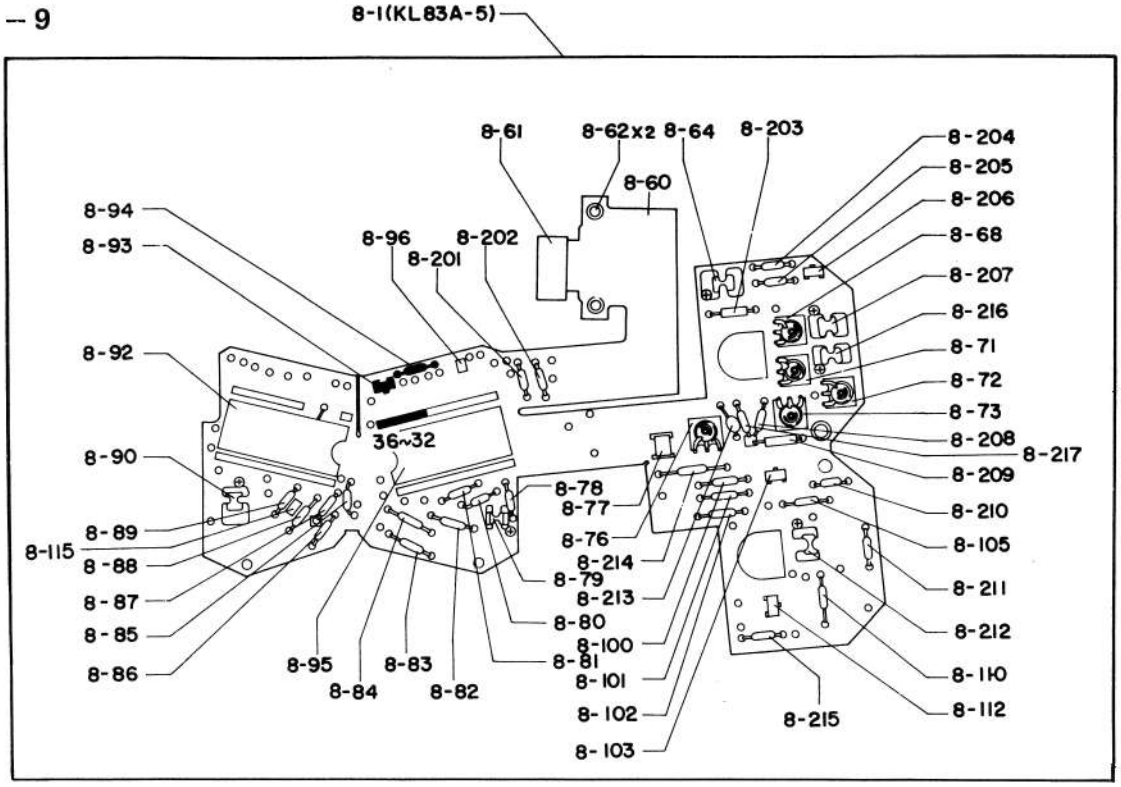

The parts relative to Vw circuit

Fig. 70 (S) – 10

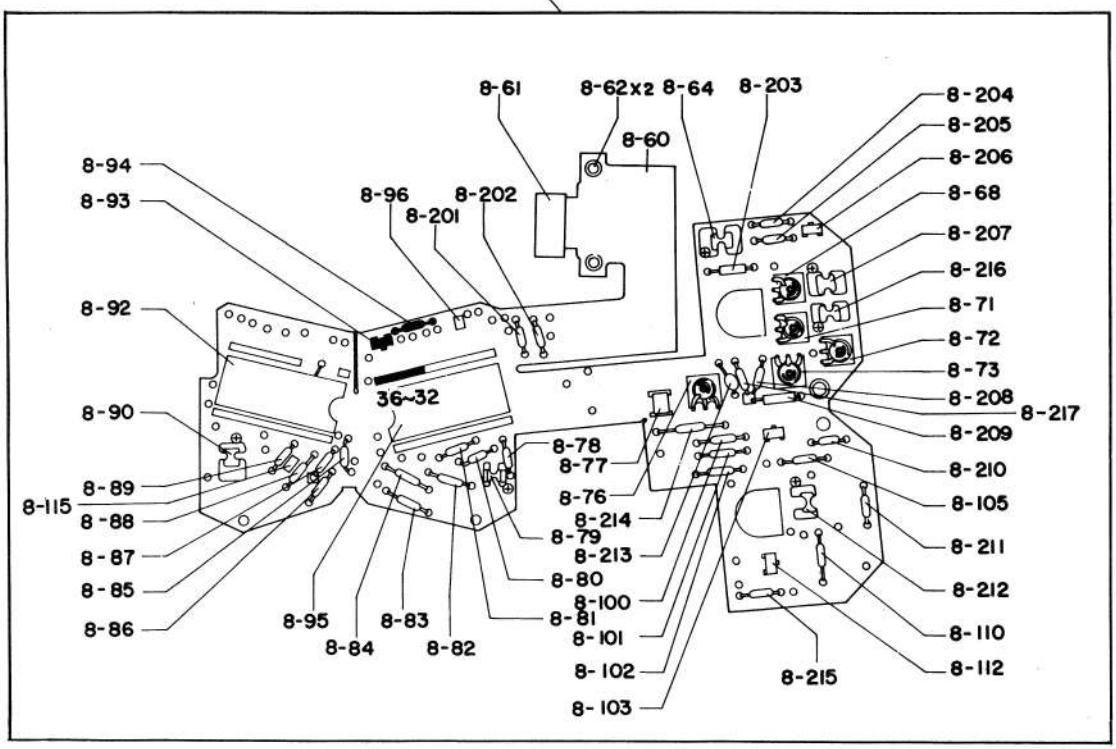

The parts relative to Os circuit

Fig. 70 (S) – 11

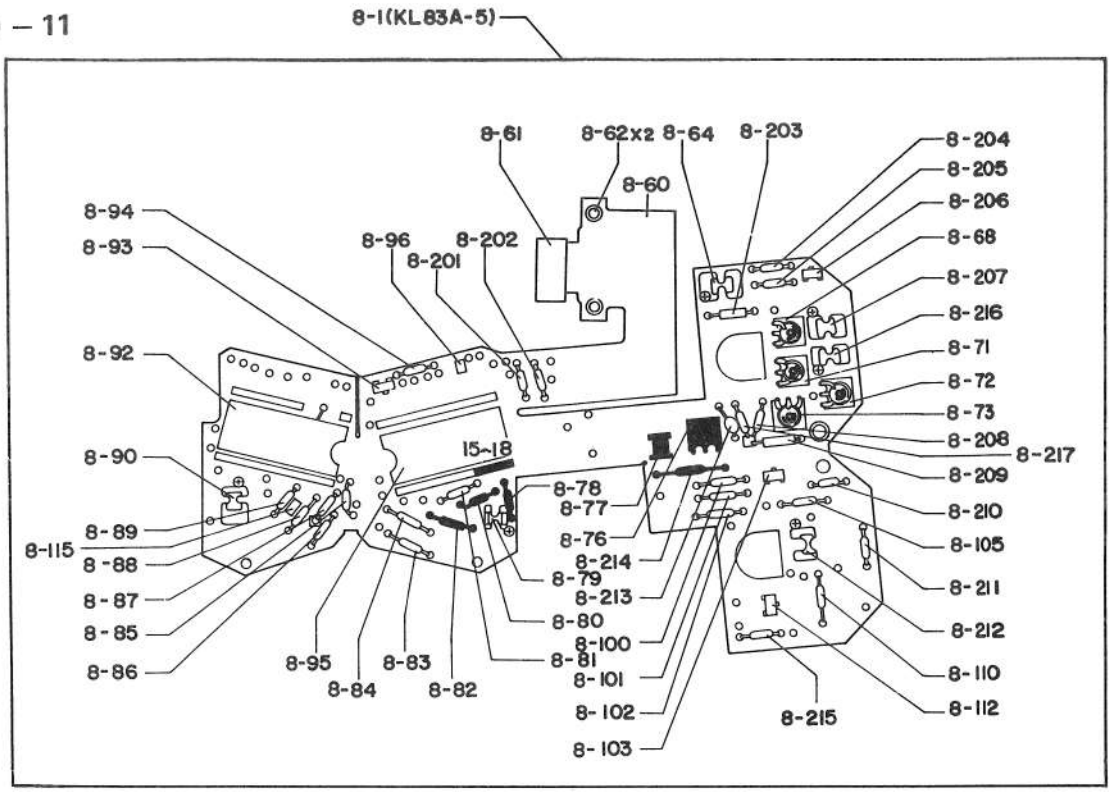

The parts relative to LED circuit

Fig. 70 (S) – 12

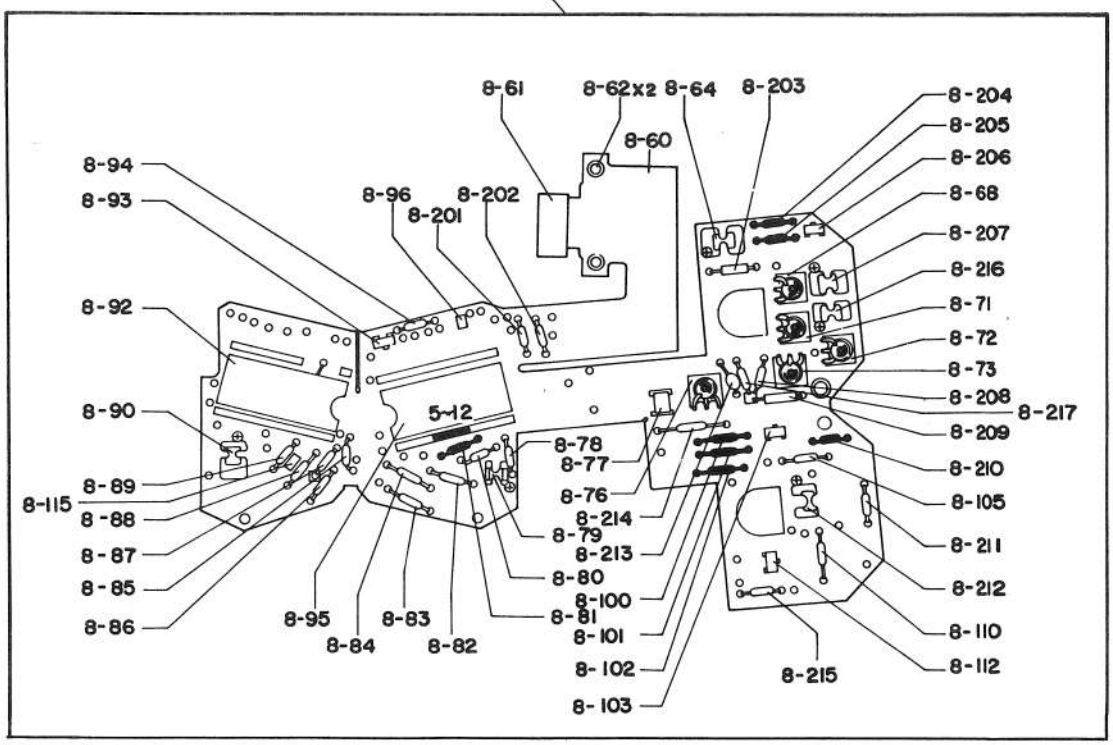

The parts relative to Vref circuit

Fig. 70 (S) – 13

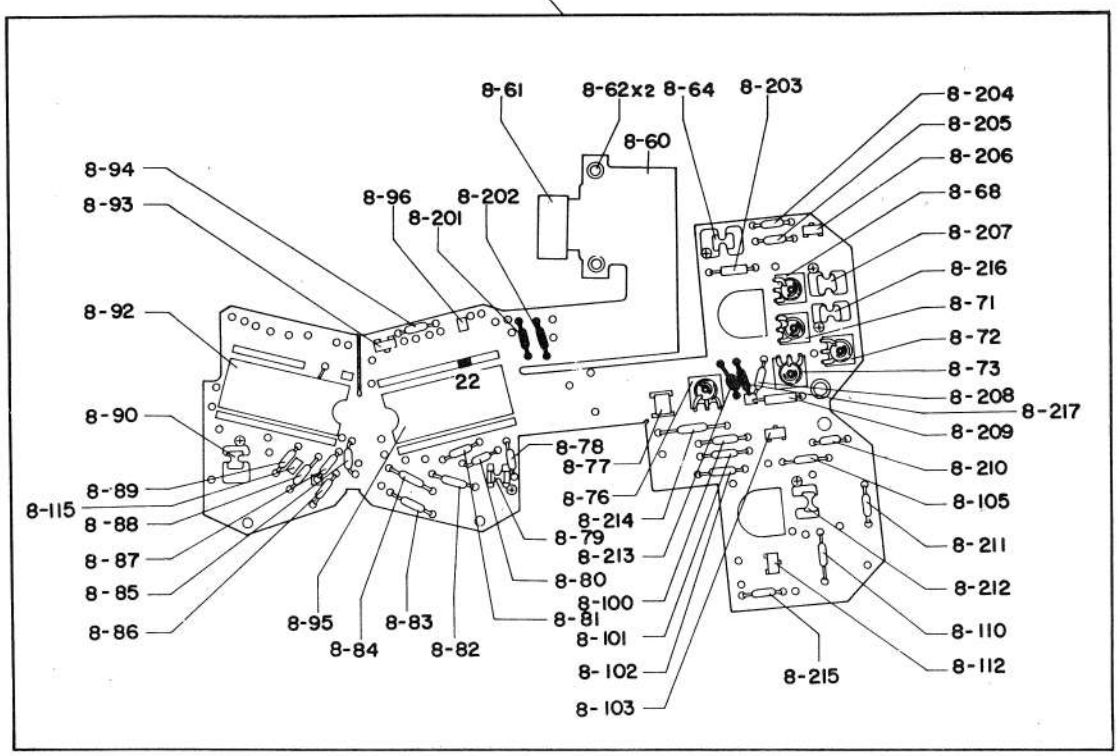

The parts relative to C circuit

Fig. 70 (S) – 14

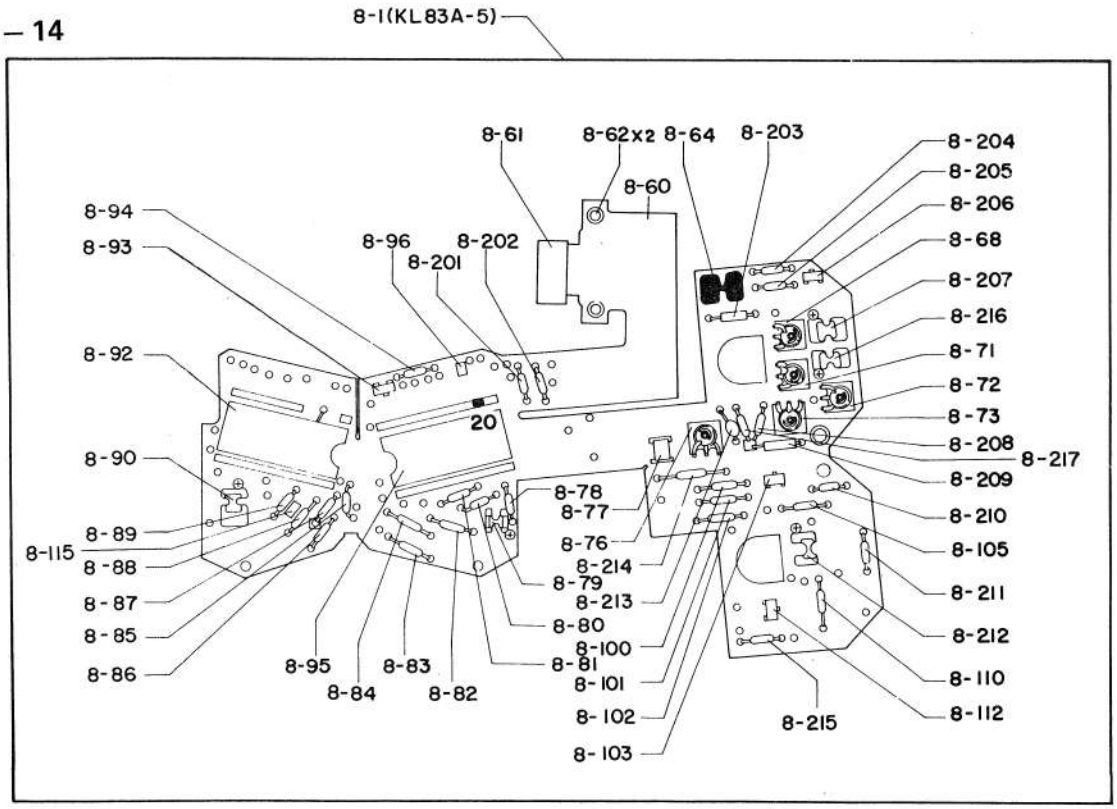

The parts relative to Sfl circuit

Fig. 70 (S) – 15

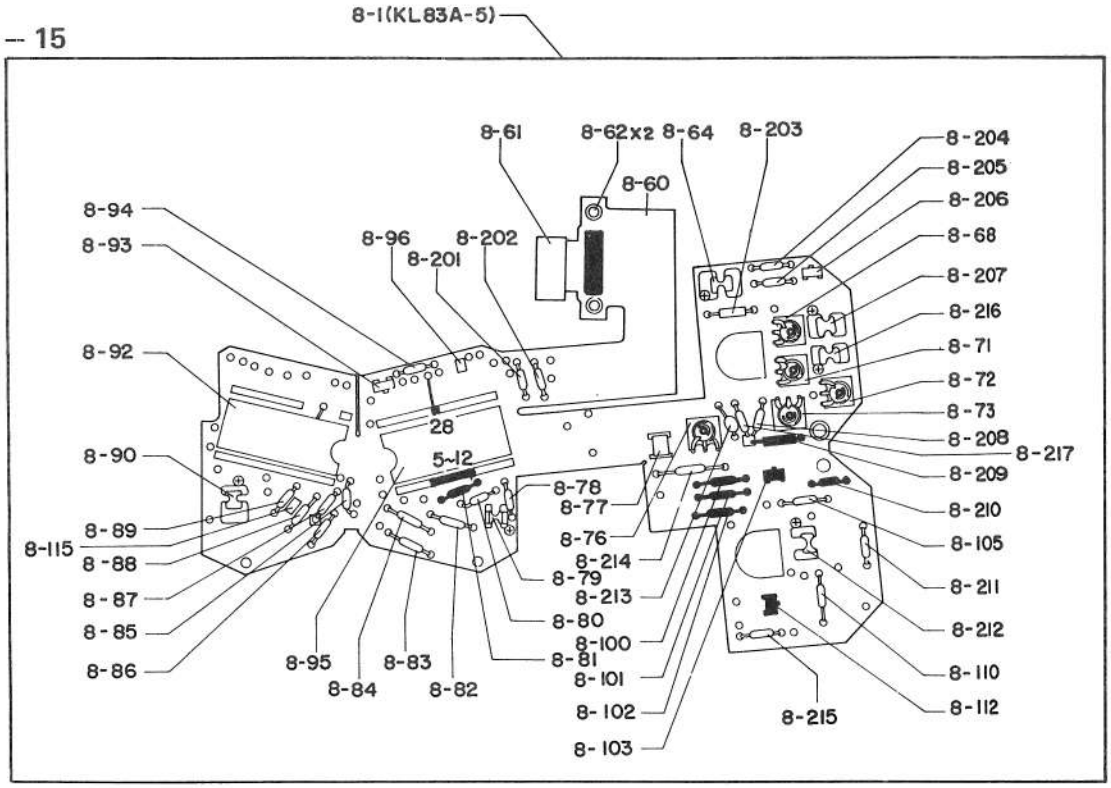

The parts relative to Vcc Check circuit

Fig. 70 (S) – 16

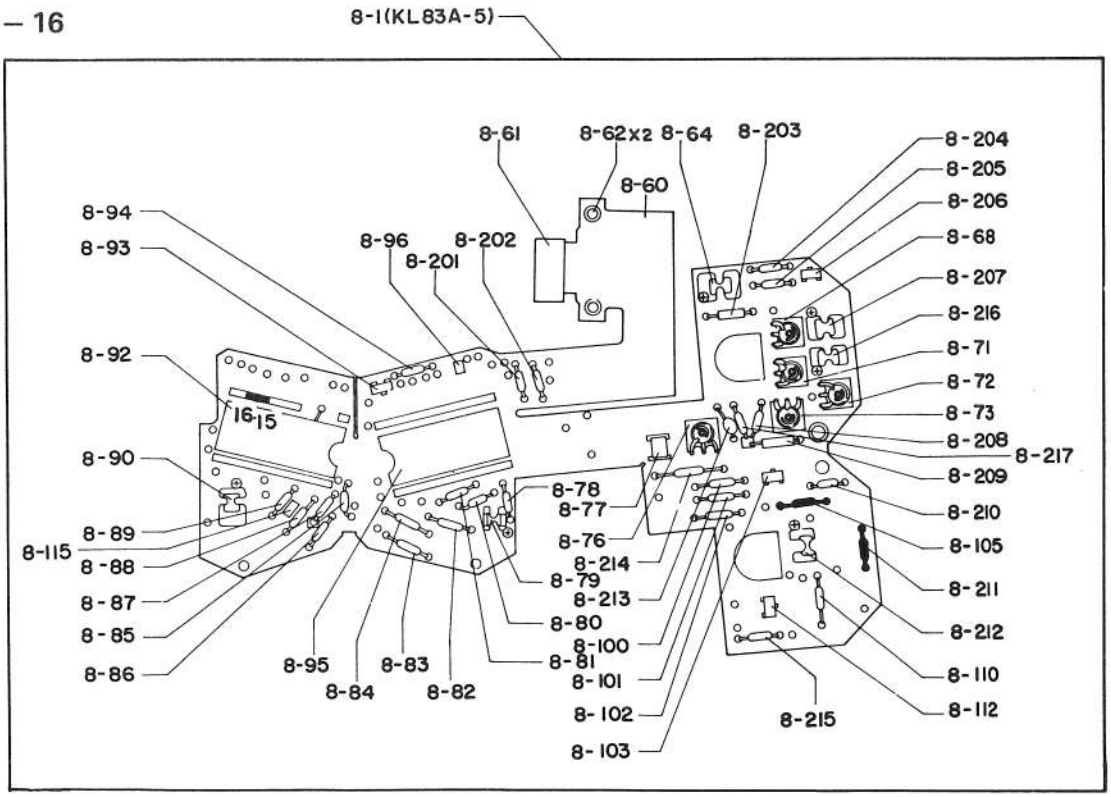

d. Variable resistors on the amplifier assembly (8 — 1)
The resistors have been adjusted as indicated on the following table.
When repairing, do not touch the resistors except for the variable resistor R7 (8 — 68) (for adjustment of exposure level).

Variable resistor	Adjustment of	For
R1 (8 — 73)	Constant voltage (Vref)	2500±10 mV
R3 (8 — 76)	Oscillation frequency (Os4)	12288±50 Hz
R4 (8 — 72) & R6 (8 — 71)	S - value & F - value calculations (Vsf)	
R6 (8 — 11)	Analogue - digital conversion	
R7 (8 — 68)	Exposure value level (Vs)	

Display and exposure time are controlled by converting analogue signal to digital signal. One digit is divided into three 1/3 EVs.

Fig. 71 (S)

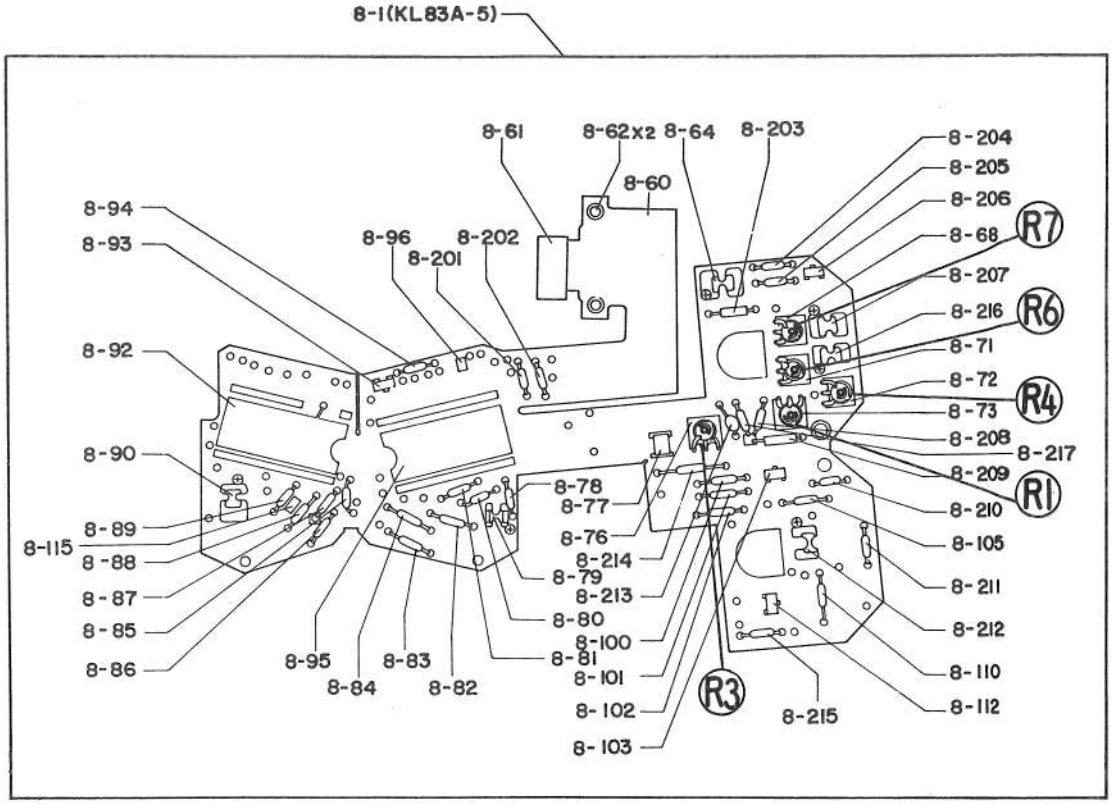
8-1(KL83A-5)
8-61
8-62x2
8-64
8-203
8-60
8-204
8-205
8-206
8-68
R7
8-207
8-216
R6
8-71
8-72
R4
8-73
8-208
8-217
8-209
R1
8-210
8-105
8-211
8-212
8-110
8-112
8-215
R3
8-94
8-93
8-96
8-202
8-201
8-92
8-90
8-89
8-115
8-88
8-87
8-85
8-86
8-95
8-84
8-83
8-82
8-78
8-77
8-76
8-214
8-79
8-213
8-80
8-100
8-81
8-101
8-102
8-103

17 — 2 LED assembly

Apply 700μA to 1 mA to the LED terminal, and see if the LED lights. When the LED does not light, the LED assembly is defective.

17 — 3 Photocell (8 — 2)

- Make sure that 50 to 300 mV is delivered to the terminal ⓐ (Vs).
- With the camera mounted with an F1.8/55 mm lens, set aperture to F5.6, set ASA to 100, and make sure that 700 to 100 mV is delivered to terminal ⓓ at LV10 to LV12. Change input light 1 EV, and make sure that voltage changes △ 40 mV.

17 — 4 Magnet assembly (coil (5 — 73) and magnet circuit assembly (8 — 8))

Apply voltage as shown in Fig. 73(S), and make sure that the magnet holds.

Fig. 72 (S)

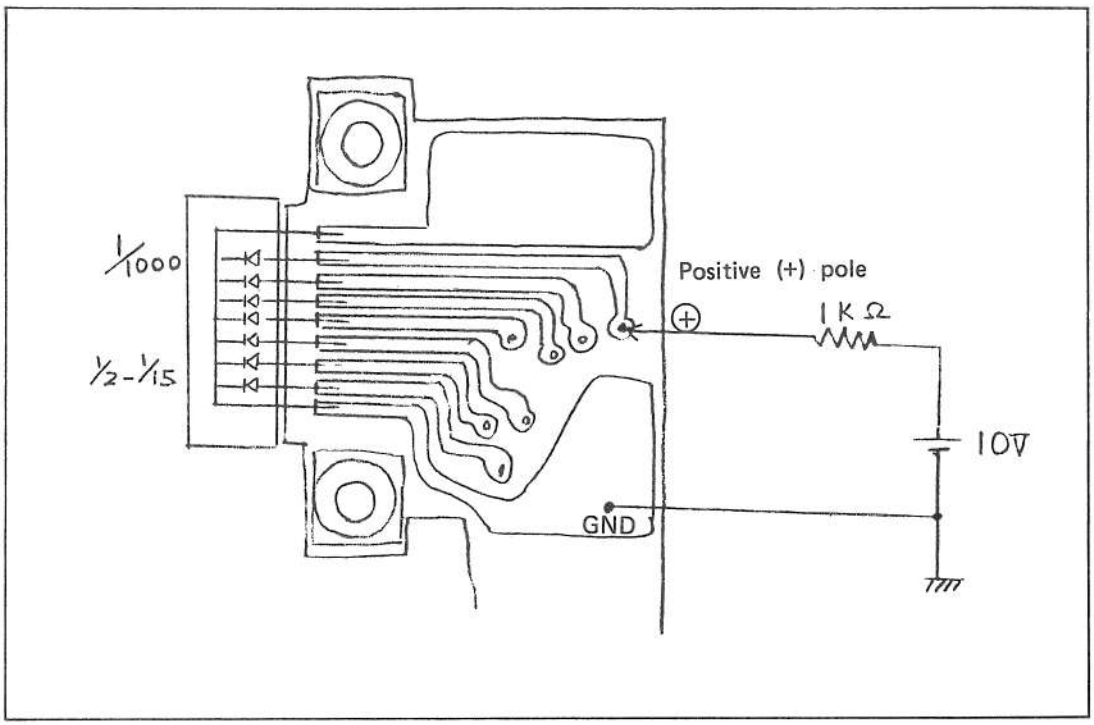

Fig. 73 (S)

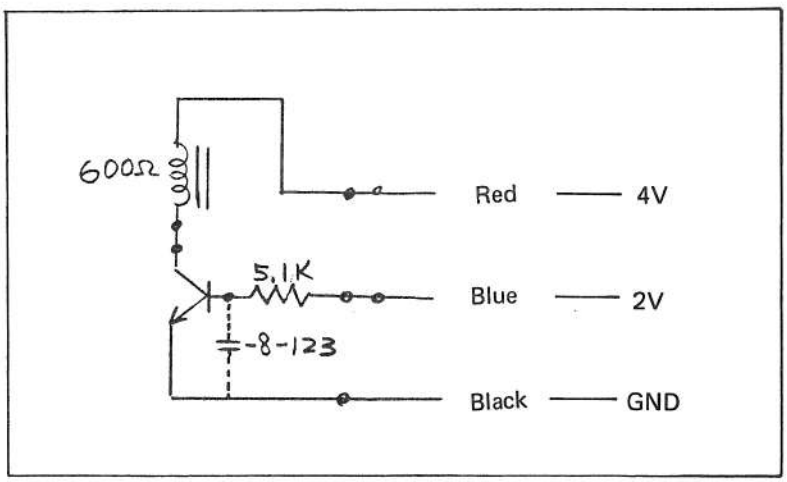

Fig. 8

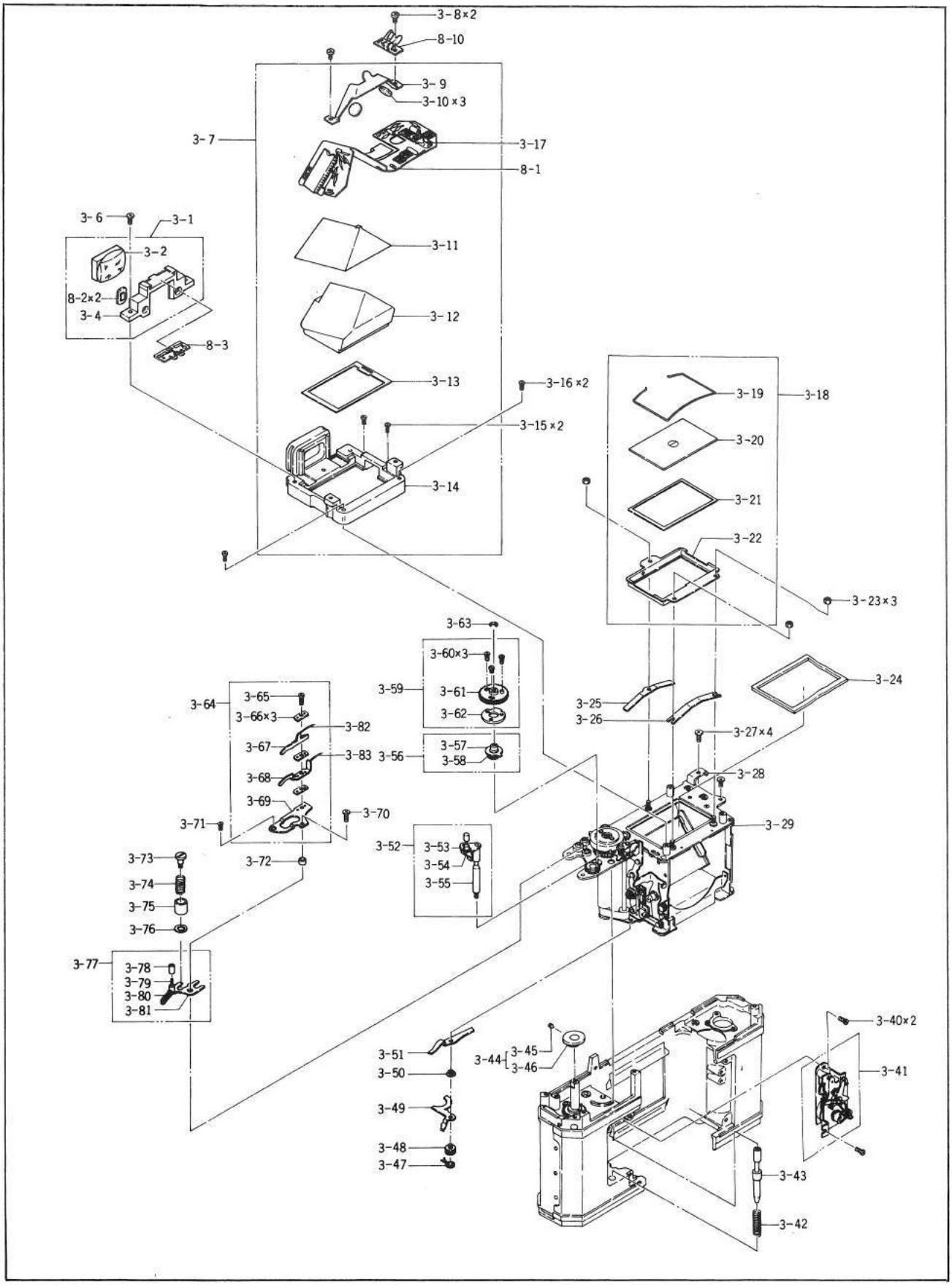
3-8×2
8-10
3-9
3-10×3
3-7
3-17
8-1
3-6
3-1
3-2
8-2×2
3-4
8-3
3-11
3-12
3-13
3-16×2
3-15×2
3-14
3-19
3-18
3-20
3-21
3-22
3-23×3
3-63
3-60×3
3-59
3-61
3-62
3-24
3-25
3-26
3-27×4
3-64
3-65
3-66×3
3-82
3-67
3-83
3-56
3-57
3-58
3-28
3-68
3-69
3-70
3-71
3-29
3-52
3-53
3-54
3-55
3-73
3-72
3-74
3-75
3-76
3-77
3-78
3-79
3-80
3-81
3-40×2
3-51
3-44
3-45
3-46
3-41
3-50
3-49
3-48
3-47
3-43
3-42

17 — 5 Aperture resistor (8 — 7)

- When the aperture resistor is normal, resistance across the terminals shown in Fig. 74(S) is 2.15±0.2 KΩ.
- When the correct resistance cannot be provided, replace the aperture resistor (8 — 7) with a new one.

17 — 6 Shutter resistor (8 — 6)

- When the shutter resistor is normal, resistance across the terminals shown in Fig. 75(S) is 4.16±0.4 KΩ.
- When the correct resistance cannot be provided, replace the shutter resistor (8 — 6) with a new one.

Fig. 74 (S)

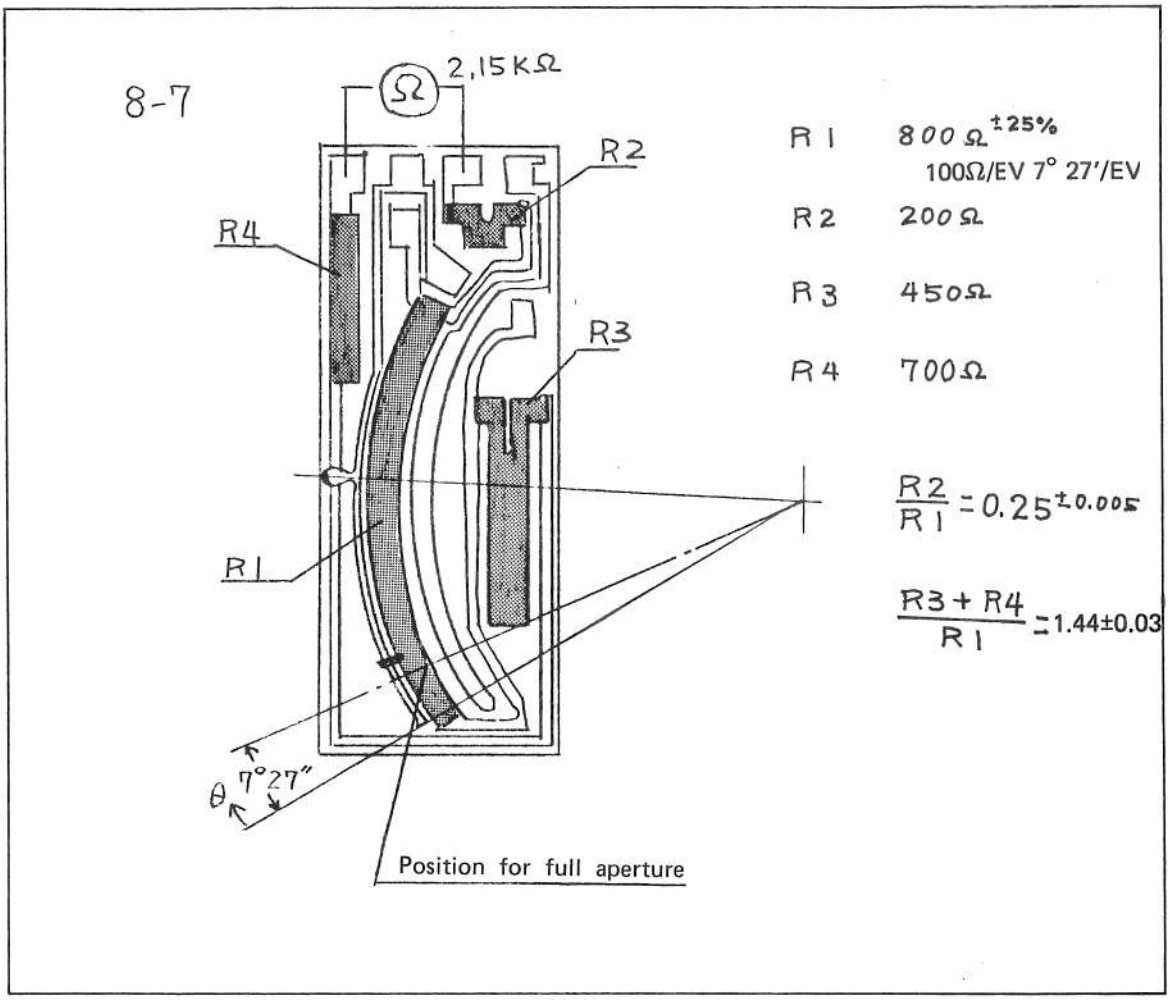

Fig. 75 (S)

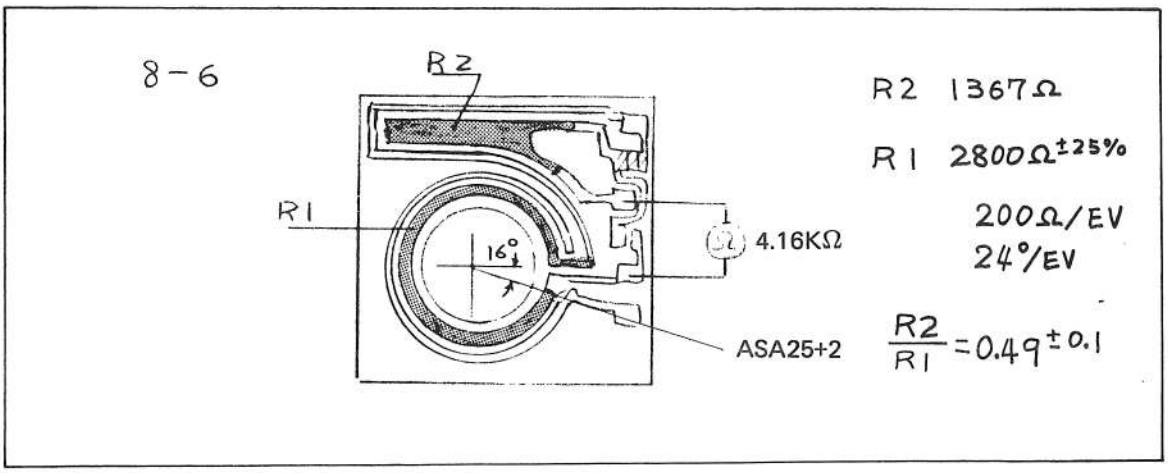

17 — 7 SN switch (8 — 5)

With the lead wires connected, make sure that voltages on lead wires (8 — 26) and (8 — 27) change over as indicated in Fig. 76(S).

Fig. 76 (S)

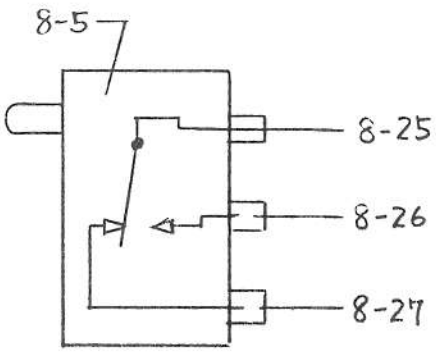

	SN – OFF	SN – ON
Black	GND	GND
Green	0V	Approx. 2V
Gray	Approx. 2V	0V

Blank Page

II

PARTS LIST

Fig. 8-1

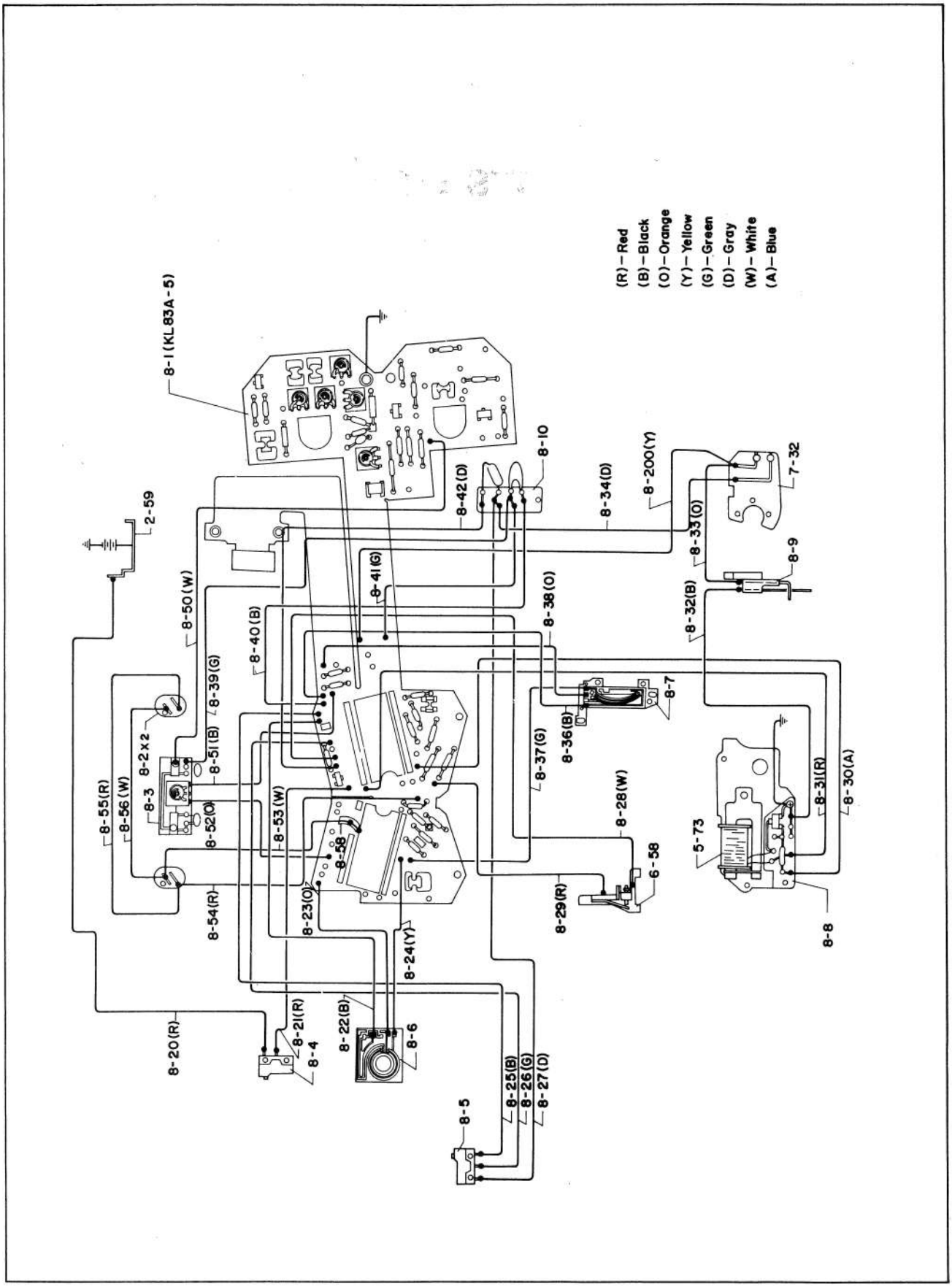
(R)-Red
(B)-Black
(O)-Orange
(Y)-Yellow
(G)-Green
(D)-Gray
(W)-White
(A)-Blue
8-1 (KL83A-5)
8-10
8-42(D)
8-34(D)
8-200(Y)
7-32
2-59
8-33(O)
8-9
8-41(G)
8-50(W)
8-38(O)
8-32(B)
8-40(B)
8-39(G)
8-7
8-36(B)
8-2×2
8-51(B)
8-37(G)
8-31(R)
8-30(A)
8-55(R)
8-56(W)
8-3
8-52(O)
8-53(W)
8-28(W)
5-73
8-58
6-58
8-54(R)
8-23(O)
8-29(R)
8-8
8-24(Y)
8-21(R)
8-22(B)
8-6
8-20(R)
8-4
8-25(B)
8-26(G)
8-27(D)
8-5

Ref No.	Part No.	Part Name	Assembled Ref No.	Q'ty	Commonly used with	
					ST605	ST901
8— 1	110A156450	Amplifier assembly		1		
8— 2	106B156370	Photocell		2		
8— 3	110A156490	Printed circuit board assembly		1		
8— 4	121K258831	SM switch		1		
8— 5	121B1934380	SN switch		1		
8— 6	117B156300	Shutter resistor		1		
8— 7	117B156310	Aperture resistor		1		
8— 8	110A156470	Magnet circuit assembly		1		
8— 9	121B156320	SA switch		1		
8—10	110A156980	Printed circuit board assembly		1		
8—20	110B156560	Lead wire (red)		1		
8—21	110B156570	Lead wire (red)		1		
8—22	110B156650	Lead wire (black)		1		
8—23	110B156660	Lead wire (orange)		1		
8—24	110B156640	Lead wire (yellow)		1		
8—25	110B156600	Lead wire (black)		1		
8—26	110B156591	Lead wire (green)		1		
8—27	110B156581	Lead wire (gray)		1		
8—28	110B156550	Lead wire (white)		1		
8—29	110B156540	Lead wire (red)		1		
8—30	110B156900	Lead wire (blue)		1		
8—31	110B156670	Lead wire (red)		1		
8—32	110B156520	Lead wire (black)		1		
8—33	110B156810	Lead wire (orange)		1		
8—34	110B156680	Lead wire (gray)		1		
8—36	110B156620	Lead wire (black)		1		
8—37	110B156630	Lead wire (green)		1		
8—38	110B156610	Lead wire (orange)		1		
8—39	110B156730	Lead wire (green)		1		
8—40	110B156710	Lead wire (black)		1		
8—41	110B156920	Lead wire (green)		1		

Fig. 8 - 2

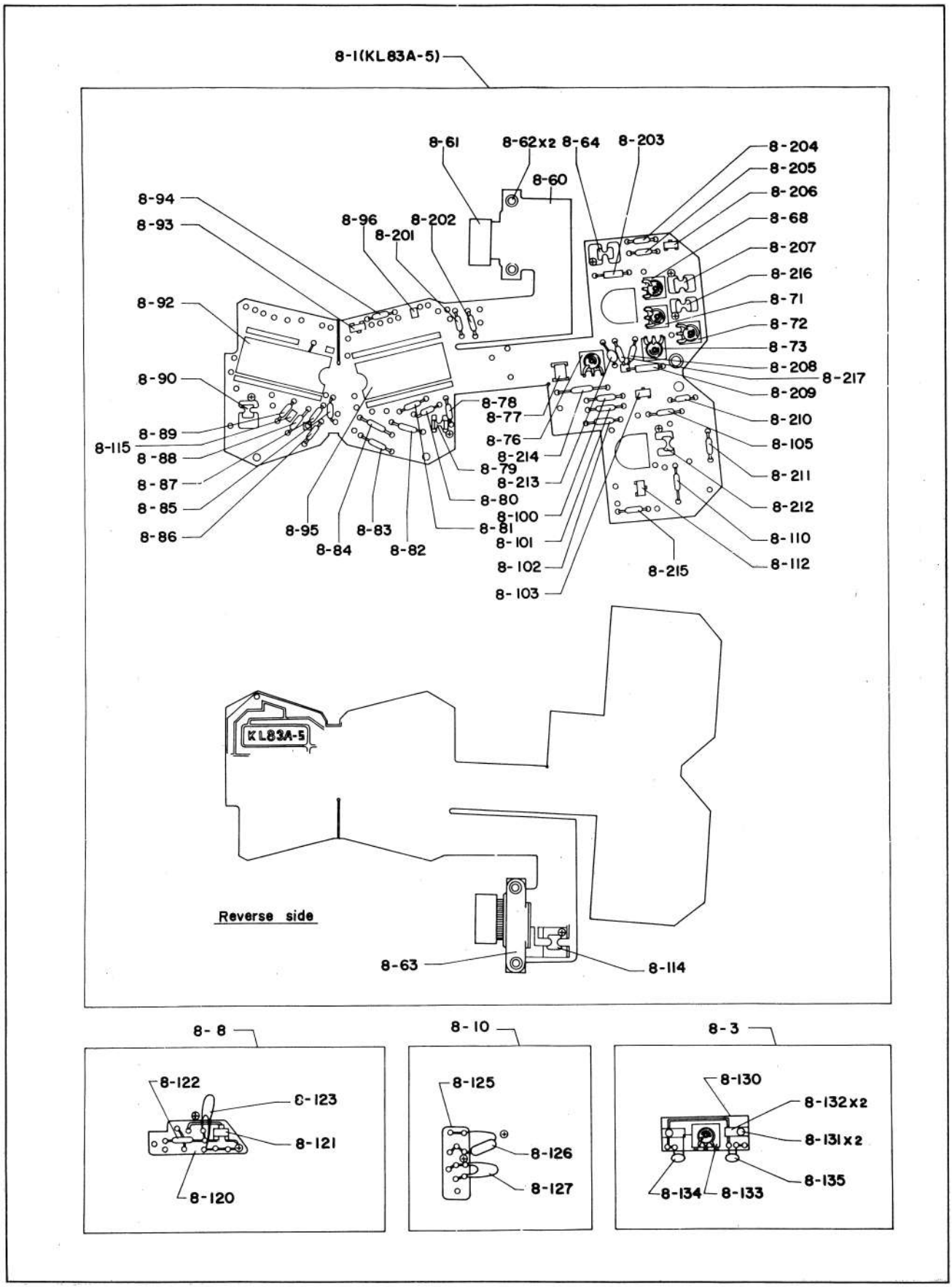
8-1(KL83A-5)
8-61
8-62x2
8-64
8-203
8-204
8-205
8-206
8-68
8-207
8-216
8-71
8-72
8-73
8-208
8-217
8-209
8-210
8-105
8-211
8-212
8-110
8-112
8-215
8-60
8-94
8-93
8-96
8-202
8-201
8-92
8-90
8-89
8-115
8-88
8-87
8-85
8-86
8-95
8-84
8-83
8-82
8-78
8-77
8-76
8-214
8-79
8-213
8-80
8-100
8-81
8-101
8-102
8-103
KL83A-5
Reverse side
8-63
8-114
8-8
8-122
8-123
8-121
8-120
8-10
8-125
8-126
8-127
8-3
8-130
8-132x2
8-131x2
8-135
8-134
8-133

Ref No.	Part No.	Part Name	Assembled Ref No.	Q'ty	Commonly used with	
					ST605	ST901
8— 42	110B156910	Lead wire (gray)		1		
8— 51	110B156710	Lead wire (black)		1		
8— 52	110B156890	Lead wire (orange)		1		
8— 53	110B156700	Lead wire (white)		1		
8— 54	110B156690	Lead wire (red)		1		
8— 55	110B1440492	Lead wire (red)		1	•	
8— 56	110B1440482	Lead wire (white)		1	•	
8— 58	110B156800	Tube		1		
8—123-1	116K277820	Capacitor 35V 0.01μF		0~1		
8—123-2	116K277830	Capacitor 35V 0.015μF		0~1		
8—123-3	116K277840	Capacitor 35V 0.022μF		0~1		
8—123-4	116K277850	Capacitor 35V 0.033μF		0~1		
8—123-5	116K277860	Capacitor 35V 0.047μF		0~1		
8—200	110B156532	Lead wire (yellow)		1		

12. Focal plane shutter assembly (3 – 29)

a. Set the shutter to a released state.

b. Remove the set screw (7 — 96).

c. Unsolder and disconnect the lead wire (8 — 33).

d. Remove the set screw (3 — 48), and remove the mirror start lever (3 — 51).

e. Remove the E - clip (3 — 63), and remove the clutch disc assembly (3 — 59).

f. Remove the four set screws (3 — 27).

g. Pull out the focal plane shutter assembly (3 — 29) carefully toward the upper direction.

III TROUBLESHOOTING FOR ELECTRONIC SHUTTER AND RELATIVE SYSTEMS

1. LED keeps lighting at the over - exposure side.

a. Check the shutter resistor (8 — 6) and aperture resistor (8 — 7) for the contact pressure and resistance.

b. Check the lead wires extended from the shutter resistor (8 — 6) and aperture resistor (8 — 7) for the soldering.

c. Check voltage (Vs) at terminal ⓐ .
When the capacitor (8 — 114), variable resistor (8 — 68), resistor (8 — 215) or pin 17 or 18 of the IC (8 — 92) is disconnected or short - circuited (due to a poor soldering), voltage at terminal ⓐ drops below the rated level causing the LED to keep lighting at the over - exposure side. (See Figs. 70(S) — 2 and 70(S) — 7).

d. Check voltage (Ph out) at terminal ⓓ .
When the capacitor (8 — 79), capacitor (8 — 115), resistor (8 — 89), resistor (8 — 88), resistor (8 — 87), resistor (8 — 86), resistor (8 — 85) or pin 11 or 32 of the IC (8 — 92) is disconnected or short - circuited (due to a poor soldering), voltage at terminal ⓓ drops below the rated level causing the LED to keep lighting at the over - exposure side. (See Figs. 70(S) — 4 and 70(S) — 7).

e. Check voltage (Sf out) at terminal ⓔ .
When the variable resistor (8 — 72) or pin 26, 27 or 28 of the IC (8 — 92) is disconnected or short - circuited (due to a poor soldering), voltage (Sf out) at terminal ⓔ drops below the rated level causing the LED to keep lighting at the over - exposure side. (See Fig. 70(S) — 5).

f. Check voltage (V_T out) at terminal ⓕ .
When the variable resistor (8 — 71) or pin 24 or 25 of the IC (8 — 92) is disconnected or short - circuited (due to a poor soldering), voltage (V_T out) at terminal ⓕ drops below the rated level causing the LED to keep lighting at the over - exposure side. (See Fig. 70(S) — 6).

g. Check the SC switch (6 — 58) to insure that it turns on correctly.

h. Check the SA switch (8 — 9) to insure that it turns off correctly.

i. Check the AEL circuit for disconnected capacitor (8 — 207), short - circuited resistor (8 — 110) or (8 — 205), disconnected resistor (8 — 205) (See Note below.), resistor (8 — 204) or transistor (8 — 206) due to a poor soldering. (See Fig. 70(S) — 8).

NOTE : When pictures are taken successively with this resistor (8 — 205) disconnected, an over - exposure occurs. Although this resistor is disconnected, when pictures are taken with a proper interval provided between shots, no over - exposure occurs.

j. Check the Vref circuit.
When the resistor (8 — 201) is disconnected at GND side due to a poor soldering, resistor (8 — 202), (8 — 213) or (8 — 208) is short - circuited, or resistor (8 — 217), diode (8 — 209) or capacitor (8 — 64) is disconnected due to a poor soldering, voltage of this circuit rises over the rated voltage. (See Fig. 70(S) — 13).

2. **LED keeps lighting at the under - exposure side.**

a. Check the shutter resistor (8 — 6) and aperture resistor (8 — 7) for a short - circuit.

b. Check the lead wires extended from the shutter resistor (8 — 6) and aperture resistor (8 — 7) for a disconnection or short - circuit due to a poor soldering.

c. Check the capacitor (8 — 114), variable resistor (8 — 68), resistor (8 — 215), and pins 17 and 18 of the IC (8 — 92) for a disconnection or short - circuit due to a poor soldering.
If any of these parts are short - circuited or disconnected due to a poor soldering, voltage (Vs) at terminal ⓐ will rise over the rated voltage. (See Figs. 70(S) — 2 and 70(S) — 7).

d. Check the capacitors (8 — 79 and 8 — 115), resistors (8 — 85 through 8 — 89) and pins 11 and 32 of the IC (8 — 92) for short - circuit or disconnection due to a poor soldering.
If anyone of these parts is short - circuited or disconnected due to a poor soldering, voltage (Ph out) at terminal ⓓ will rise over the rated voltage. (See Figs. 70(S) —4 and 70(S) — 7).

e. Check the variable resistor (8 — 72) and pins 26, 27 and 28 of the IC (8 — 92) for disconnection or short - circuit due to a poor soldering.
If anyone of these parts is disconnected or short - circuited due to a poor soldering, voltage (Sf out) at terminal ⓔ will rise over the rated voltage. (See Figs. 70(S) — 5 and 70(S) — 7).

f. Check the variable resistor (8 — 71) and pins 24 and 25 of the IC (8 — 92) for disconnection or short - circuit due to a poor soldering.
If anyone of these parts is disconnected or short - circuited due to a poor soldering, voltage (V_T out) at terminal ⓕ will rise over the rated voltage.

g. Check the resistors (8 — 202 and 8 — 208) for a disconnection, diode (8 — 209) for a short - circuit, resistor (8 — 201) for a short - circuit and capacitor (8 — 64) for a short - circuit or disconnection due to a poor soldering.
When anyone of these parts is not connected correctly, voltage of the Vref circuit will rise over the rated voltage. (See Fig. 70(S) — 13).

3. LED does not light.

a. Check the SN switch (8 — 5) to see if it turns on and off correctly.

b. Check the SM switch (8 — 4) to see if it turns on correctly.

c. Check the lead wires extended from the SN switch (8 — 5) and SM switch (8 — 4) to the amplifier assembly (8 — 1) for a short - circuit and disconnection due to a poor soldering.

d. Check the tarnsistor (8 — 93), resistor (8 — 94) and pins 32 through 36 of the IC (8 — 95) for a disconnection due to a poor soldering.
If anyone of these parts is not connected firmly, the Vcc GND circuit does not operate correctly. (See Fig. 70(S) — 9).

e. Check the LED (8 — 61) terminals, pins 5 through 12 of the IC (8 — 95) and resistor (8 — 81) for a disconnection due to a poor soldering.
If anyone of these parts is not connected correctly, LED circuit does not operate correctly. (See Fig. 70(S) — 12).

4. LED keeps lighting and does not go out.

a. Check the SN switch (8 — 5) to see if it turns on and off correctly.

b. Check the lead wires (8 — 27 and 8 — 42) for a short - circuit (grounding) or disconnection.

c. Check the diode (8 — 126) to see if it is connected correctly.

d. Check the transistor (8 — 93), resistor (8 — 94) and pins 32 through 36 of the IC (8 — 95) for a disconnection due to a poor soldering.
If anyone of these parts is not connected correctly, the Vcc GND circuit does not operate correctly. (See Fig. 70(S) — 9).

5. Some LEDs do not light.

Check the LED (8 — 61) for a disconnection of the terminals due to a poor soldering, and check pins 5 through 12 of the IC (8 — 95) and resistor (8 — 81) for a disconnection due to a poor soldering.
If anyone of these parts is not connected firmly and correctly, the LED circuit does not operate correctly. (See Fig. 70(S) — 12).

6. All LEDs light at the same time.

Check pins 15 through 18 of the IC (8 — 95), resistors (8 — 87, 8 — 80, 8 — 82 and 8 — 214), capacitor (8 — 77) and variable resistor (8 — 76) for a disconnection due to a poor soldering.
If anyone of these parts is not connected firmly and correctly, the Os circuit does not operate correctly. (See Fig. 70(S) — 11).

7. **AE lock does not function.**

Check pin NO. 1 of the IC (8 — 95), transistor (8 — 206), capacitor (8 — 207), and resistors (8 — 204, 8 — 205 and 8 — 211) for a disconnection due to a poor soldering. If anyone of these parts is not connected firmly and correctly, the AEL circuit does not operate correctly. (See Fig. 70(S) — 8).

8. **The magnet does not hold. (LED operates normally).**

a. Check the set screws (5 — 70) on the printed circuit board (8 — 120) to see if they are tightened securely. When these set screws are loosened, the line to be grounded through the screws will not be grounded correctly.

b. Check the coil (5 — 73) for a breaking.

c. Check the magnet hook to insure that it is adjusted correctly.

d. Check the attracted surface to insure it is positioned correctly.

e. Check the lead wires (8 — 30 and 8 — 31) for a disconnection due to a poor soldering.

9. **Under - exposure at EV7 (under - exposure at low luminosity)**

Range of under exposure should be within 1/3 EV against the medium luminosity (EV11). When under - exposure at LV7 exceeds the range, measure voltage (V_T out) at terminal (f) and change the voltage by adjusting the variable resistor (8 — 71). Exposure can be adjusted 1/3 EV per 10 mV.

10. **Mirror does not come down.**

a. When the LED blinks at 16 Hz, the magnet assembly is short - circuited.

b. When the LED does not light and the mirror comes down as the SN switch changes over, pin No. 36 of the IC (8 — 95) is disconnected.

c. When the LED lights and the mirror does not come down as the SN switch changes over, pin No. 31 of the IC (8 — 95) is disconnected.

d. Check the SC switch to see if it turns off correctly.

11. **Regardless of shutter speed selection, the shutter is always released in 1/1000 sec.**

a. Check the contact gap between the core (5 — 74) and attracted contact piece (5 — 87). If this gap is excessive, the shutter releases always in 1/1000 sec. Adjust the magnet hook.

b. Check the SC switch assembly (6 — 58) for chattering.

c. Check the SC switch assembly (6 — 58) to insure that it is not short - circuited (grounded).

d. Make sure that the SC switch assembly (6 — 58) turns on correctly.

12. When a 1/60 sec. or faster shutter speed is selected at LV11, F5.6, ASA100, the shutter releases always in 1/1000 sce., or when a 1/60 sec. or slower shutter speed is selected, an under - exposure occurs.

Make sure that time between turn off of the SC switch and starting of the 1st blind is correct. If this time is too long, this trouble occurs.

13. Regardless of shutter speed selection, the shutter is always released in 1/2 sec.

a. Check the SA switch (8 — 9) to see if it turns on correctly.

b. Make sure that the shutter is released when more than 50 msec. are elapsed after the SN switch turns on. The 50 msec. is the time required for the AEL circuit to function. So, if the shutter is released within 50 msec. after the SN switch turned on, exposure is made immediately before the mirror goes up causing the shutter to release always in 1/2 sec.

Reparing method :

- Repair the SA switch (8 — 9) so that it turns on and off correctly.
- Make the point where the SN switch turns on shallower, and make shutter releasing depth deeper.

14. When a strobo for Fujica AZ - 1 is mounted on the camera, LED does not light at "60".

a. Check pin No. 28 of the IC (8 — 95), transistor (8 — 215) and resistors (8 — 100, 8 — 101 and 8 — 102) for a disconnection due to a poor soldering.
If anyone of these parts is not connected correctly, the Sf1 circuit does not operate correctly. (See Fig. 70(S) — 15).

b. Check pins (1 — 36) for the contact. If these pins are not in a proper contact, the printed circuit board assembly (8 — 3) does not operate correctly.

15. When a strobo for Fujica AZ - 1 is mounted on the camera, correct shutter speed is not provided.

When shutter speeds are normal under the automatic exposure mode and LED lights at "60", correct shutter speeds should be provided even if the strobo is mounted on the camera. Refer to 14 above.

16. When a strobo for Fujica AZ - 1 is mounted on the camera, correct exposure is not provided.

When shutter speeds are normal under the automatic exposure mode and LED lights at "60", Vsf voltage (+1300mV) is abnormal. Refer to 16 — 1 of the Supplementary Repair Manual, and adjust Vsf voltage.

17. Exposure fluctuates

Display and exposure time are controlled by means of an A — D conversion and one digit is divided into three 1/3 EVs. When an analogue light source is on the line between any two of these three 1/3 EVs, no exposure fluctiation occurs. Exposure fluctuates because the analogue light source goes into one 1/3 EV section some time and to another 1/3 EV section at other time. Hence, an 1/3 EV exposure fluctuation occurs at all shutter speeds.

Moreover, when shutter speed is selected manually at 1/1000 sec., the 2nd blind hook (4 — 20) and lever (5 — 91) act the same 2nd blind at the same time, causing the 2nd blind traveling to fluctuate.

Thus, when shutter speed is selected at 1/1000 sec., only exposure fluctuations which exceed 1/2 EV must be considered abnormal, and those within 1/2 EV should be considered normal.

Reparing Method

- When exposure fluctuation occurs at all shutter speeds , check the amplifier assembly and take corrective action.
- When exposure fluctuation occurs at 1/60 sec. or faster shutter speed, correct fluctuation of time between turn off of the SC switch and starting of the 1st blind.
- When exposure fluctuation occurs at 1/1000 sec. only, readjust the lever (5 — 91) for proper hooking.

18. Over or under - exposure occurs at high luminosity (LV15)

When an over - exposure occurs :

- Remove the capacitor (8 — 123)
- Check blind traveling velocity at manually selected 1/1000 sec. shutter speed.
- Increase force of the spring (5 — 94) used to pull back the magnet lever assembly (5 — 85).
- Check the 1st and 2nd blinds for their positions.

When an under - exposure occurs :

- Connect a proper capacitor (8 — 123).

  NOTE : Generally, maximum under - exposure is 1.5 EV. When the under - exposure is remarkable and it exceeds 1.5 EV, check the lever (5 — 91) for proper hooking and properly reduce time between turn off of the SC switch and starting of the 1st blind.

19. Fujica Auto Winder does not operate.

- Check the lead wires (8 — 32, 8 — 33, 8 — 34 and 8 — 200) for a disconnection or short - circuit.
- Check the contact pins (7 — 33) for a correct continuity.
- Check the SN switch (8 — 5) to see it switches over correctly. (If this switch does not switch over correctly, automatic operation becomes abnormal).
- Check the SA switch for contact.

REPAIR MANUAL
&
PARTS LIST

FOR

FUJICA AZ-1

(SUPPLEMENT)

No.2

This supplementary repair manual is to be filed with the repair manual for Fujica AZ — 1 issued August, 1977. In relation with the issuance of this Supplement No. 2, assign No. 1 to the Supplement issued November, 1977.

This Supplement No. 2 applies for those of serial number 301XXXX and thereafter.

FUJI FILM

FUJI PHOTO FILM CO., LTD.

26-30, Nishiazabu 2-Chome, Minato-ku, Tokyo 106, Japan

1. REFERENCE

III – 7 Adjustment of SC switch assembly (6 – 58), Page 73 of the Repair Manual.

2. GENERAL

The SC switch assembly (6 – 58) has been changed from the NC type to an NO type to improve reliability of the SC switch and to improve accuracy of the timing of the 1st blind starting after SC switch operation.
In relation with this change, the mirror driving mechanism and resistors in the amplifier assembly (8 – 1) have been changed.

3. OPERATING PRINCIPLE

When the shutter release button is depressed, the lever (5 – 27) moves to the direction indicated by the arrow mark. (See Fig. S2.)
As the lever (5 – 27) moves to this direction, the mirror goes up and a tension is generated on the spring lever (6 – 101).
Then the mirror shifting lever (6 – 102) kicks portion Ⓑ of the hook lever (6 – 103) causing portion Ⓐ to be disengaged. As the result, the shutter blind start lever (6 – 100) moves to the direction indicated by the arrow mark, causing the shutter blind to start. At the same time, the SC switch turns on.

4. INSTALLATION AND ADJUSTMENT OF SC SWITCH AND MIRROR SHIFTING LEVER

(1) Apply Helicolube / Molycote mixed grease to the collar (6 – 105) slightly.

(2) Check the mirror shifting lever (6 – 102) for its motion.

Regardless of posture of the camera (at any posture of the camera), the spring lever (6 – 101) must be pushed by the pin (6 – 25) and return to the position over the hook lever (6 – 103) as indicated in the Fig. S2.
When motion of the spring lever (6 – 101) is unsatisfactory, reduce spring force of the hook lever (6 – 103).

(3) Install the shutter blind start lever (6 – 100), move the mirror shifting lever (6 – 102), and make sure that the shutter blind starts correctly.

(4) Install the SC switch (6 – 107).

Move the mirror shifting lever (6 – 102) to engage the hook lever (6 – 103) at portion Ⓐ (the hook lever (6 – 103) then comes into contact with the mirror shifting lever (6 – 102) at portion Ⓑ), and under this condition, select position of the SC switch so that gap of the switch contact is 0.5 to 0.7 mm.

CAUTION : If this gap is excessive, the contact will be weakened causing an insufficient contact pressure.

(5) Ground the SC switch on the camera body by soldering.

Fig. S1

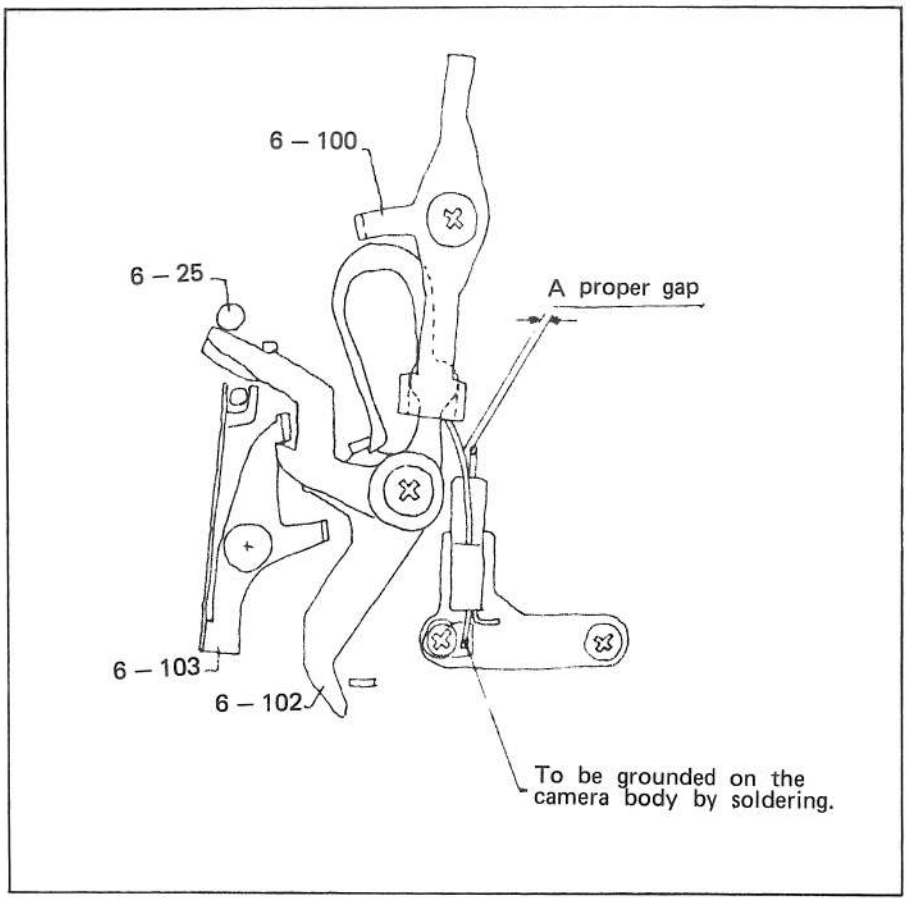
6 – 100
6 – 25
A proper gap
6 – 103
6 – 102
To be grounded on the camera body by soldering.

Fig. S2

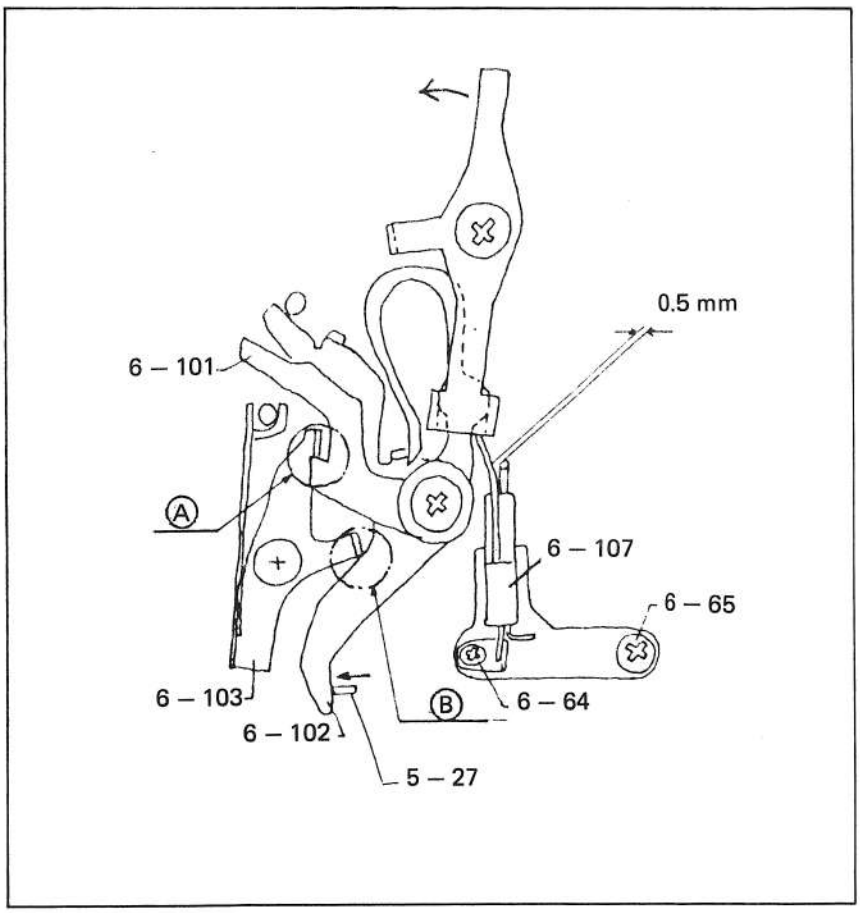
0.5 mm
6 – 101
Ⓐ
6 – 107
6 – 65
6 – 103
Ⓑ
6 – 64
6 – 102
5 – 27

Fig. 9

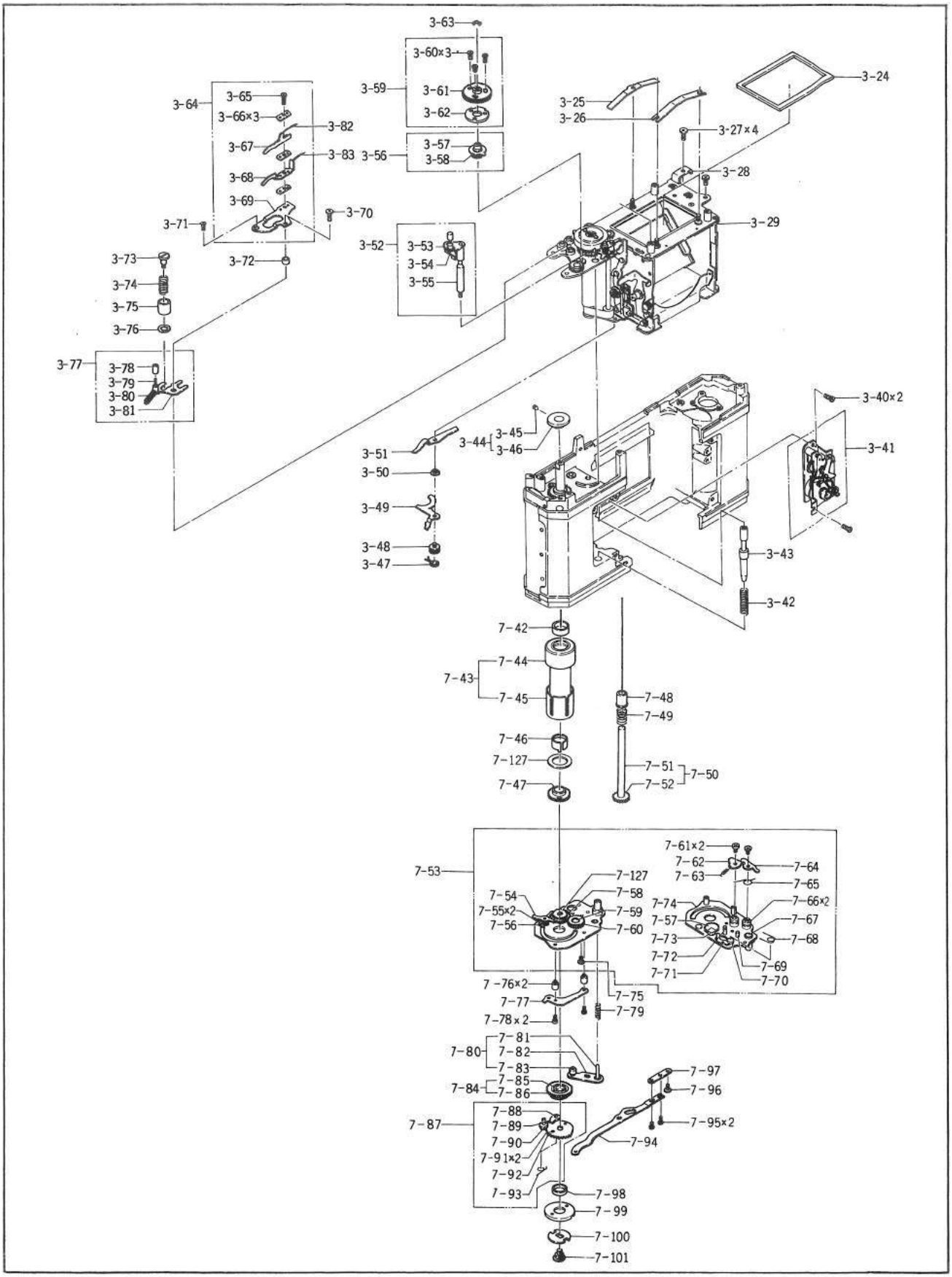
3-63
3-60×3
3-59
3-61
3-62
3-64
3-65
3-66×3
3-82
3-67
3-83
3-56
3-57
3-58
3-68
3-69
3-71
3-70
3-72
3-52
3-53
3-54
3-55
3-73
3-74
3-75
3-76
3-77
3-78
3-79
3-80
3-81
3-24
3-25
3-26
3-27×4
3-28
3-29
3-40×2
3-41
3-44
3-45
3-46
3-51
3-50
3-49
3-48
3-47
3-43
3-42
7-42
7-44
7-43
7-45
7-48
7-49
7-46
7-127
7-47
7-51
7-52
7-50
7-53
7-61×2
7-62
7-63
7-64
7-65
7-127
7-58
7-54
7-55×2
7-59
7-56
7-60
7-74
7-66×2
7-57
7-67
7-73
7-68
7-72
7-69
7-71
7-70
7-76×2
7-77
7-75
7-79
7-78×2
7-81
7-80
7-82
7-83
7-97
7-85
7-84
7-86
7-96
7-88
7-87
7-89
7-95×2
7-90
7-94
7-91×2
7-92
7-93
7-98
7-99
7-100
7-101

5. MODIFICATION ON THE AMPLIFIER ASSEMBLY (8 – 1)

As the NC type SC switch is changed to an NO type, resistors in the amplifier assembly (8 – 1) are changed as shown below:

NOTE : When remodifying an NO type to NC type, remove the 10 KΩ resistor and connect a 1.0 KΩ and 1.8 KΩ resistors.

Fig. S3

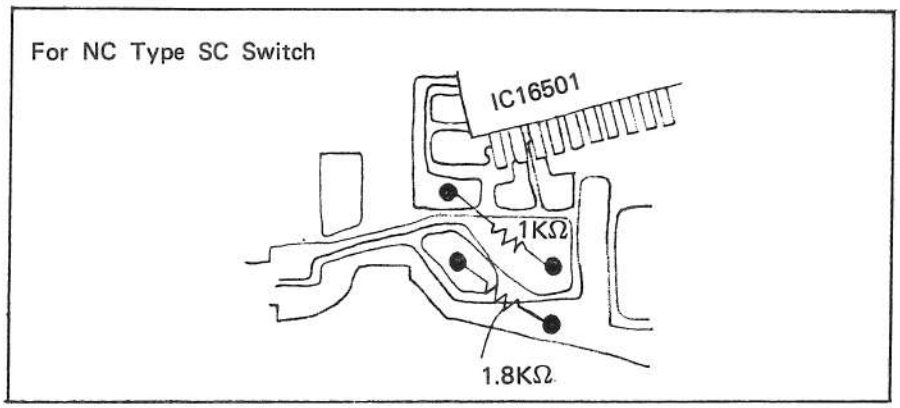

Fig. S4

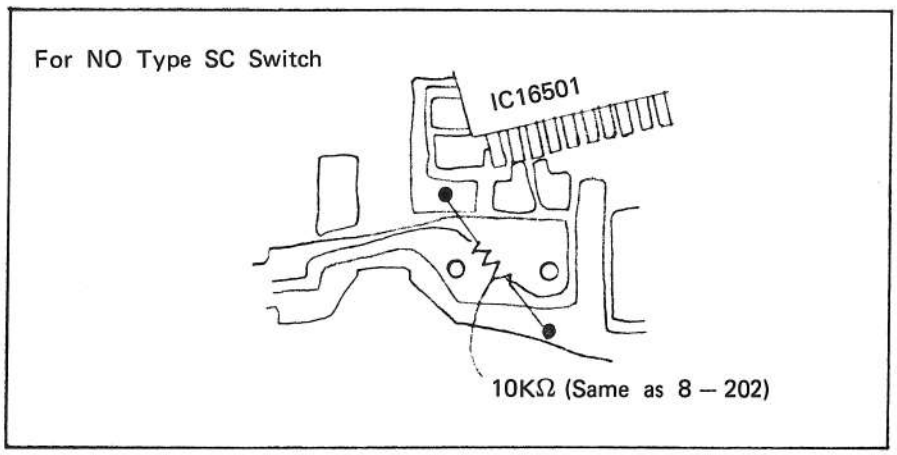

As indicated above, the 1.0 KΩ and 1.8 KΩ resistors are no longer used, but a 10 KΩ resistor is used.

Fig. S5

New type SC switch and mirror shifting lever assembly

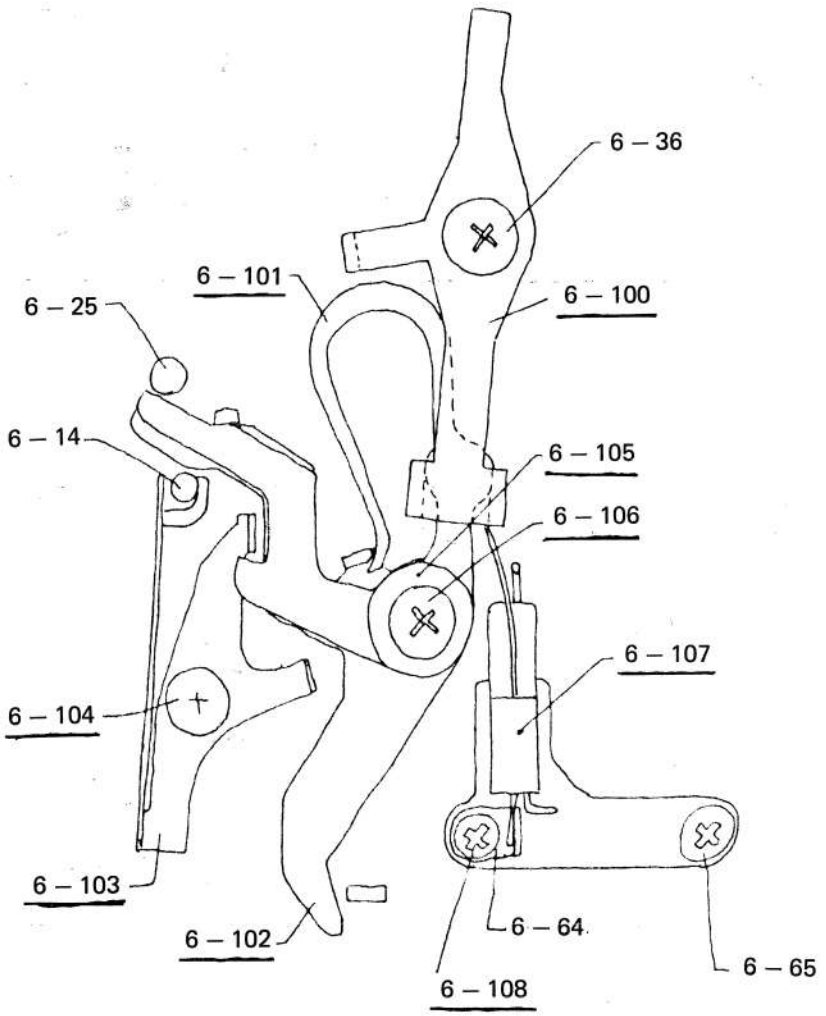

In the above figure, the under - lined parts are newly added parts.

6. PARTS LIST

Add the following parts to the Parts List.

Ref No.	Part No.	Part Name	Q'ty
6 – 100	47B 1940700	Shutter blind start lever	1
6 – 101	50B 1940720	Spring lever	1
6 – 102	47B 1940710	Mirror shifting lever	1
6 – 105	42B 1940730	Collar	1
6 – 106	110M 170301S	Set screw	1
6 – 107	121B 156330	SC switch assembly	1
6 – 108	110M 140203N	Set screw	1

Blank Page

REPAIR MANUAL
&
PARTS LIST

FOR

FUJICA *AZ*-1

(SUPPLEMENT)

NO. 3

This supplementary repair manual is to be filed with the repair manual for Fujica AZ — 1 issued August, 1977. For simplification of circuit components, new IC (HA16509P) has been used in those manufactured during May, 1978 and thereafter. In relation with this improvement, the amplifier assembly has also been changed from KL83A - 5 to KL83A - 9.
This supplementary repair manual No. 3 mainly introduces how to use this new amplifier assembly on those which use amplifier assemblies of the former types. It is also informed that some of those manufactured during May and June, 1978 still use the amplifier assemblies KL83A - 5.

FUJI FILM

FUJI PHOTO FILM CO., LTD.

1978. 6

26-30, Nishiazabu 2-Chome, Minato-ku, Tokyo 106, Japan

Blank Page

1. **WIRING:** Refer to the attached Figure 8 - 1000.

2. **IDENTIFICATION:** The new type amplifier assembly (KL83A - 9) is marked "HA16509P" in the digital circuit side while the former type (KL83A - 5) is marked "HA16501P". The mark "HA16502P" in the analogue circuit side is remained as is without change.

3. **INSPECTION AND REPAIR:** Each lead wire is provided with a voltage symbol. Refer to "Troubleshooting for Electronic Shutter and Relative Systems" (Chapter III of Supplement No. 1 issued November, 1977).

In the amplifier assembly (KL83A - 9) developing process, about 300 KL83A - 8 amplifier assemblies were used. This KL83A - 8 amplifier uses a 30 KΩ resistor on the lead wire (8 - 311) extended from the printed circuit board assembly (8 - 3).

Fig. 1

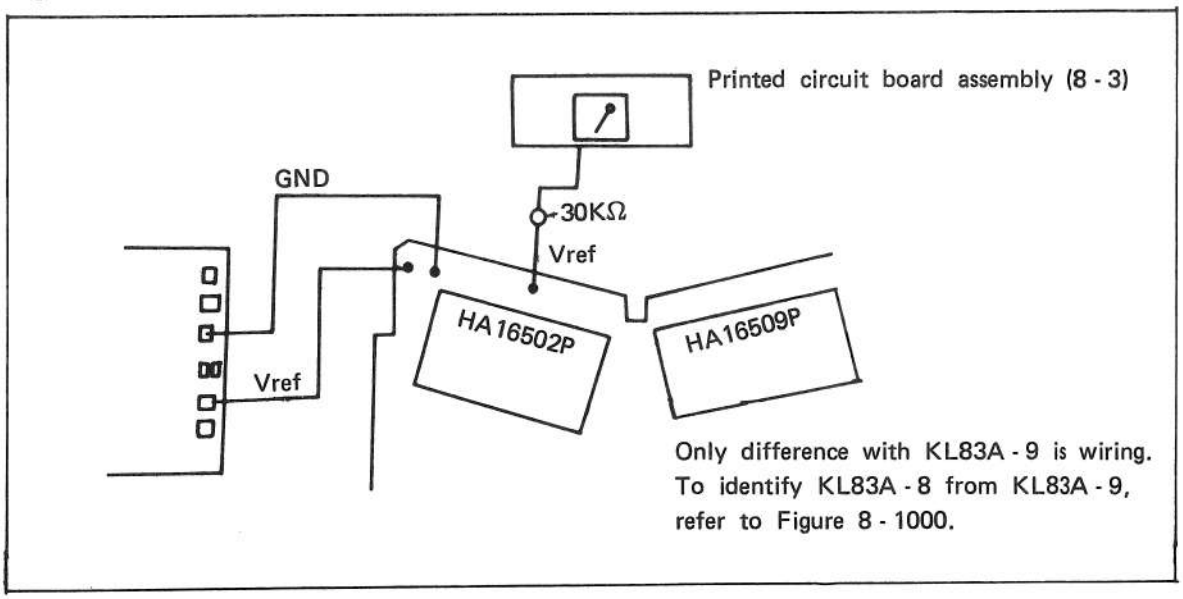

4. REPLACING KL83A - 5 AMPLIFIER ASSEMBLY WITH KL83A - 9 AMPLIFIER ASSEMBLY

The method of replacement differs depending whether the used SC switch is NC (Normally Closed) type or NO (Normally Open) type.

- To identify whether the KL83A - 5 amplifier assembly uses an NO type or NC type SC switch, see the following figure.

Fig. 2

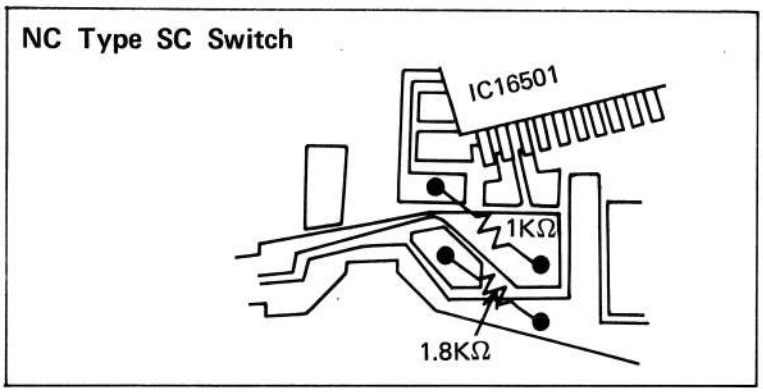

Fig. 3

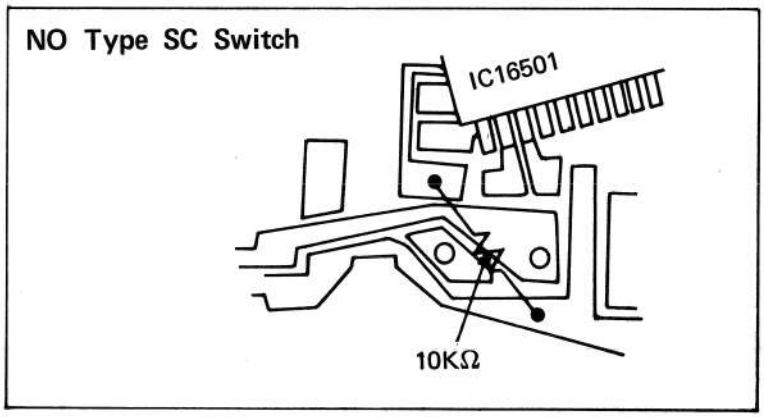

- When installing KL83A - 9 amplifier assembly on a camera using NO type SC switch, make connection in accordance with the wiring diagram for KL83A - 9.
  The printed circuit board assembly (8 - 10) is not required.

○ Installing KL83A - 9 amplifier assembly on a camera using NC type SC switch, add the following circuit.

Fig. 4

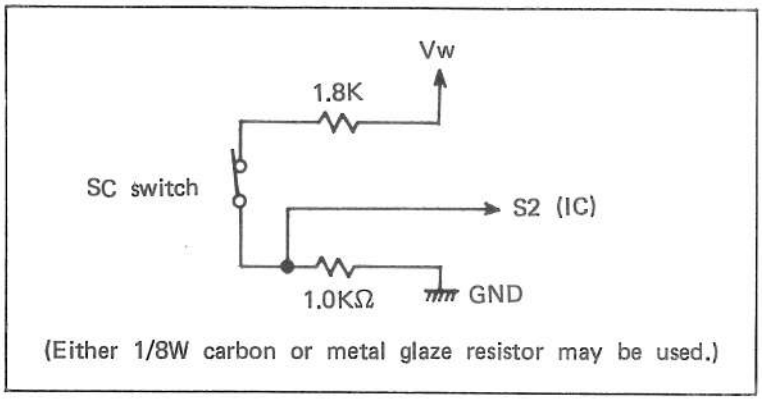

Fig. 5

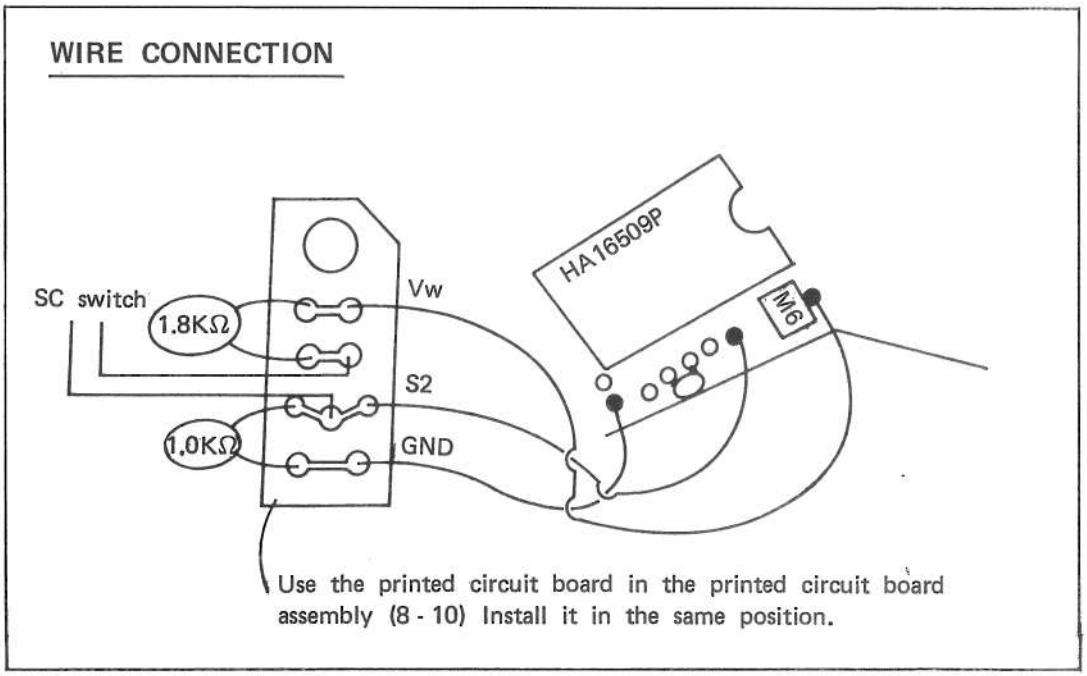

13. Film chamber door assembly (7 – 106)

Remove the three set screws (7 — 125), and remove the film chamber door assembly (7 — 106).

14. Main body assembly

14 — 1 Ratchet assembly (7 — 87) and connecting plate (7 — 100)

a. Remove the set screw (7 — 101). Note that this screw has been locked with Araldite.

b. Remove the connecting plate (7 — 100) from the take - up spindle (7 — 13).

c. Remove the blind (7 — 99), collar (7 — 98) and mirror set lever (7 — 94) from the take - up spindle (7 — 13).

d. Remove the ratchet assembly (7 — 87) from the take - up spindle (7 — 13).

14 — 2 Base plate assembly (7 — 53)

a. Remove the two set screws (7 — 78), and remove the plate (7 — 77).

b. Remove the two screws (7 — 76) and set screw (7 — 75), and remove the base palte assembly (7 — 53).

14 — 3 Take - up spindle assembly (7 — 12)

a. Remove the base plate assembly (7 — 53), and remove the spur gear (7 — 47) and washer (7 — 127).

b. Pull out the spool assembly (7 — 43).

c. Remove the screw ring (7 — 8) by unscrewing it, and remove the gear (7 — 9) from the take - up spindle (7 — 13).

d. Remove the two screws (7 — 10), and pull out the take - up spindle assembly (7 — 12) toward the upper direction together with the spool holder (7 — 11).

5. REPLACING KL83A - 9 AMPLIFIER ASSEMBLY WITH KL83A - 5 AMPLIFIER ASSEMBLY

Your repair shop may have KL83A - 5 amplifier assembly still in your stock on - hand, it may be desired to use them. In this case, connect wires in the same manner as the KL83A - 5 amplifier circuit which uses NO type SC switch.
Moreover, in this case, a printed circuit board assembly (8 - 10) is newly required.

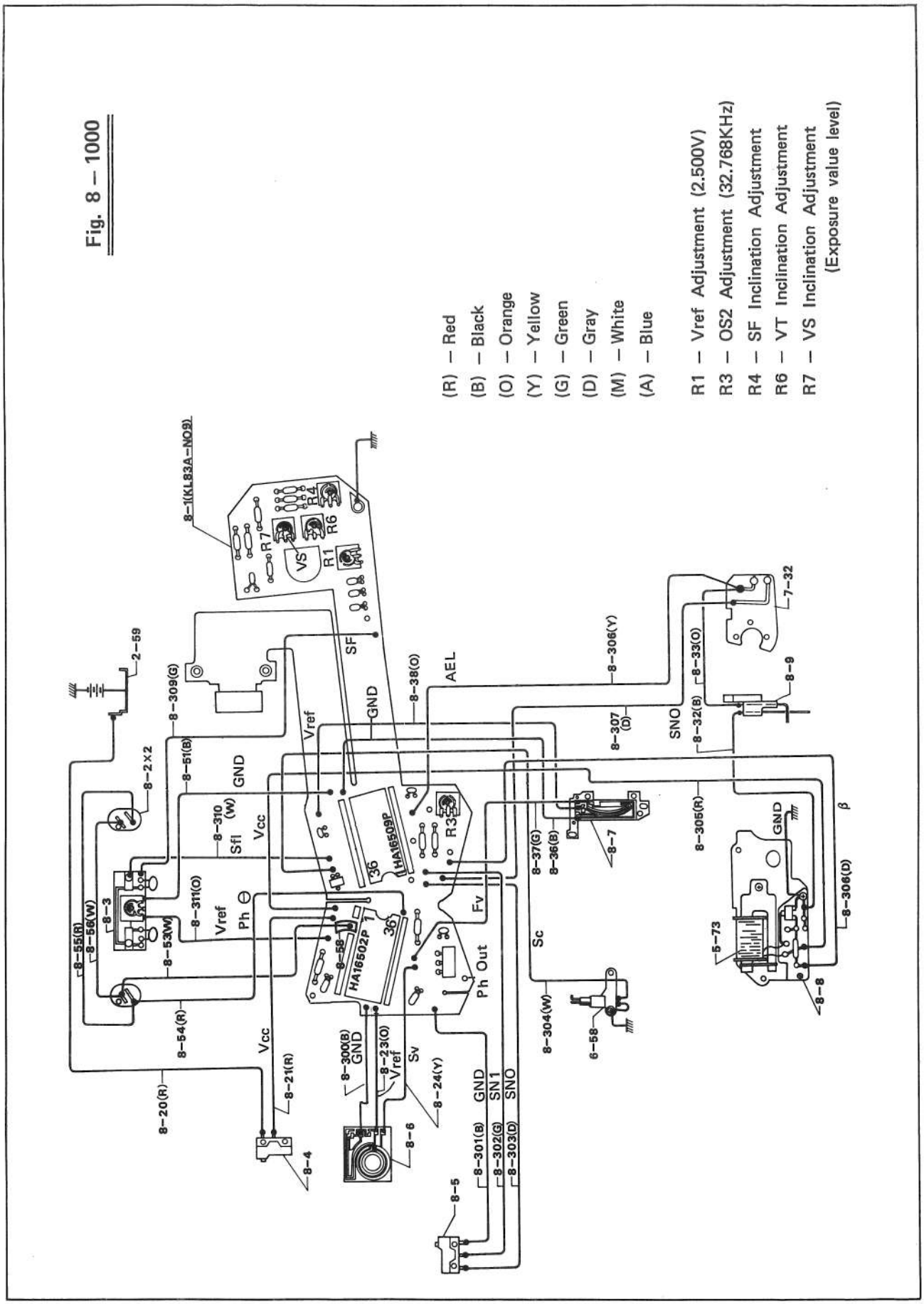
(R) – Red
(B) – Black
(O) – Orange
(Y) – Yellow
(G) – Green
(D) – Gray
(M) – White
(A) – Blue
R1 – Vref Adjustment (2.500V)
R3 – OS2 Adjustment (32.768KHz)
R4 – SF Inclination Adjustment
R6 – VT Inclination Adjustment
R7 – VS Inclination Adjustment
(Exposure value level)
8-1(KL83A-NO9)
R7
R6
R4
VS
R1
R3
HA16509P
HA16502P
SF
GND
AEL
Vref
Vcc
Sfl
Ph
Fv
Ph Out
Sc
Sv
SN1
SNO
β
2-59
8-309(G)
8-2X2
8-51(B)
8-310 (W)
8-311(O)
8-3
8-55(R)
8-56(W)
8-53(W)
8-54(R)
8-20(R)
8-21(R)
8-4
8-300(B)
8-23(O)
8-6
8-24(Y)
8-301(B)
8-302(G)
8-303(D)
8-5
8-58
8-38(O)
8-306(Y)
8-307 (D)
8-32(B)
8-33(O)
7-32
8-9
8-37(G)
8-36(B)
8-7
8-305(R)
8-304(W)
6-58
5-73
8-8
8-306(D)

Fig. 8 – 1000

Blank Page

TECHNICAL INFORMATION

Fujica AZ-1

SUBJECT: Amplifier Assembly of New Type

The conventionally supplied amplifier assembly (Flexible Printed Circuit board (FPC)) (8-1) is no longer supplied. Now on, the new type (8-1A) will be supplied.
The contained are the circuit diagram, wiring diagram, precautions for installing the FPC of new type, repair method, etc.

PARTS SUPPLY INFORMATION

FORMER TYPE						NEW TYPE			
REF NO.	PARTS NO.	PARTS NAME	QTY	NO LONGER SUPPLIED	CONTINUOUSLY SUPPLIED	REF NO.	PARTS NO.	PARTS NAME	QTY
8-1	No. 9 110A156452	Amplifier assembly (FPC)	1	○		8-1A	110156453	Amplifier assembly (FPC)	1
	No. 5 110A156450	Amplifier assembly (FPC)	1	○					

REMARKS:

May 1983

FUJI PHOTO FILM CO., LTD.
26-30, Nishiazabu 2-Chome, Minato-ku, Tokyo 106, Japan

INSTALLING THE FPC OF NEW TYPE

1. Detach the presently used printed circuit boards (PCB) (8-3 and 8-10), and use them as transit PCBs.

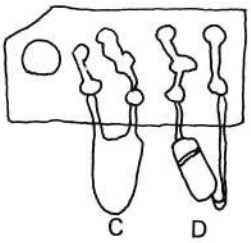

Disconnect C and D.

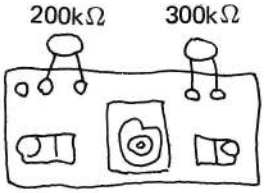

Disconnect resistors (200kΩ and 300kΩ)

2. Cut off the summit of the penta prism cover as shown below.

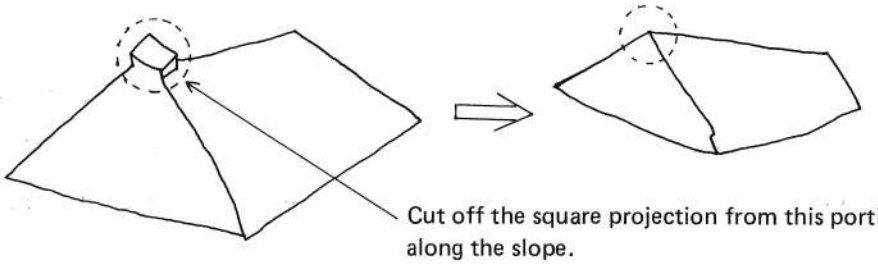

3. Set the FPC of new type on the penta prism as shown below.

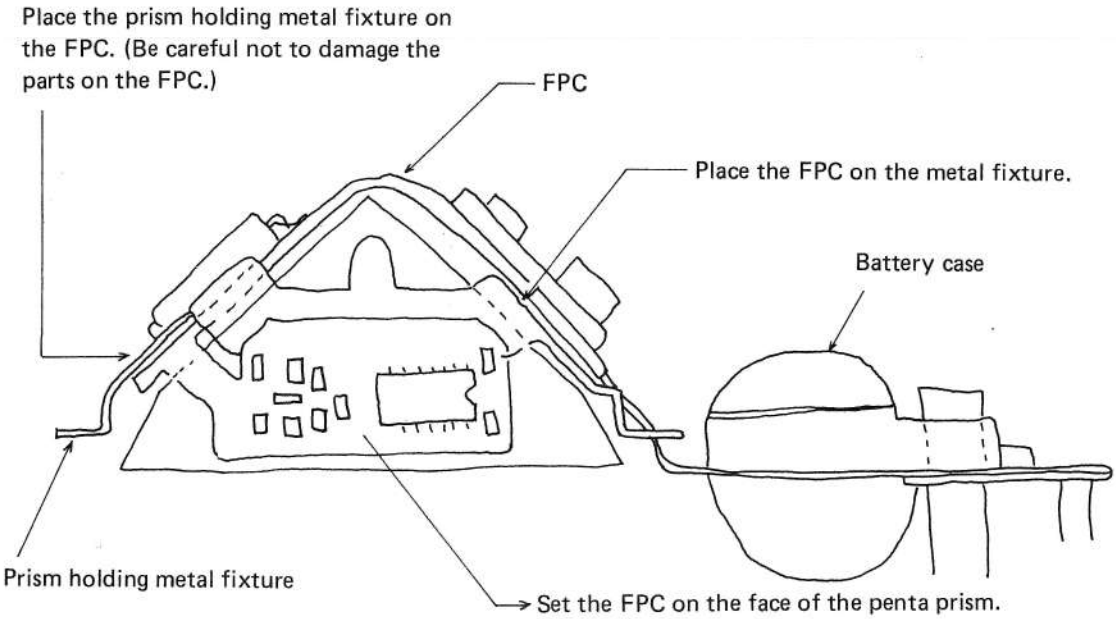

4. Transit FPC

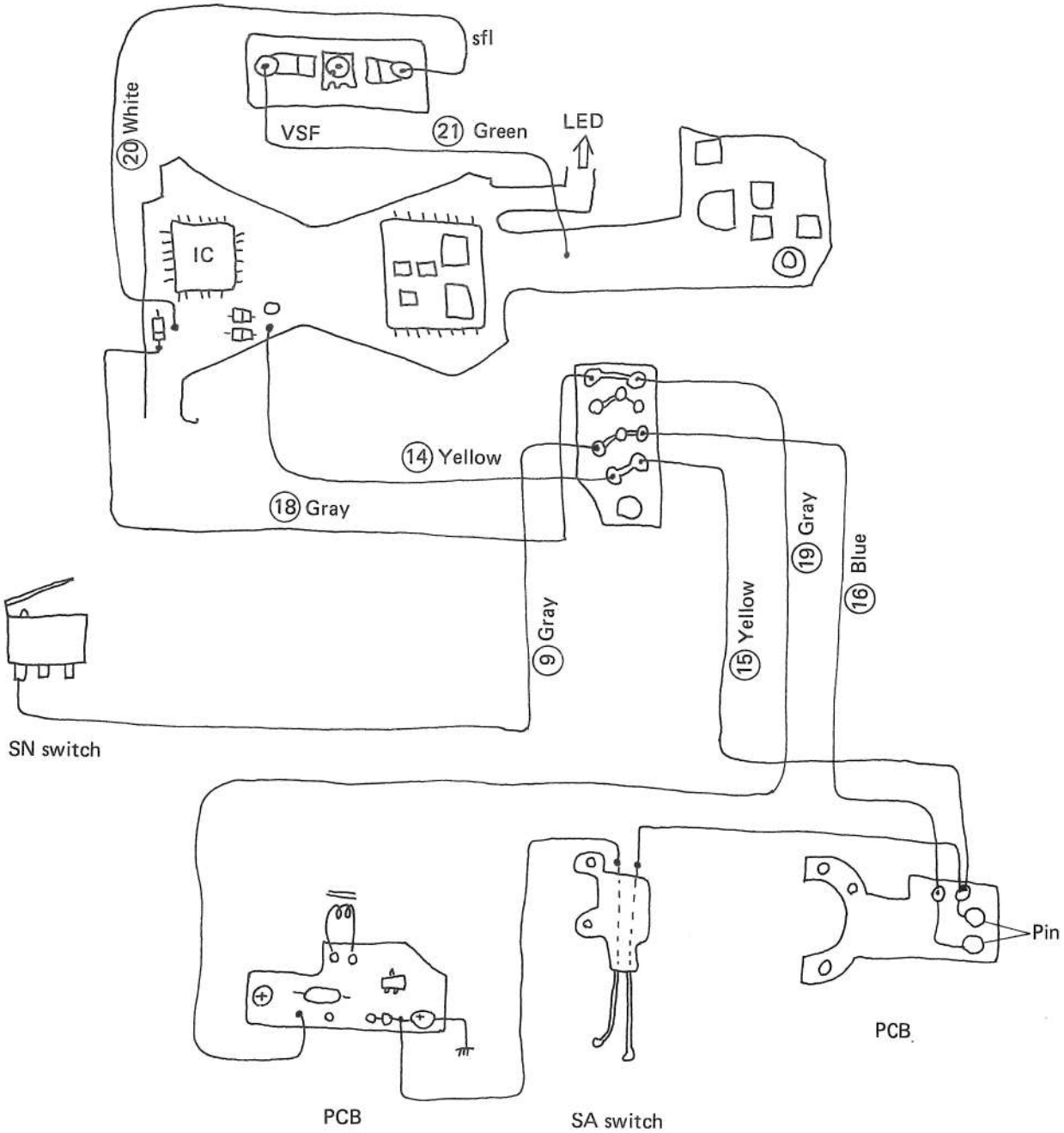

5. Wiring for Sc switch

a. ON type (Make wiring as shown on the wiring diagram.)

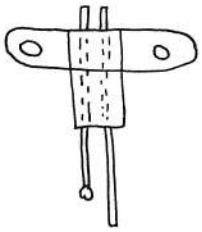

b. OFF type

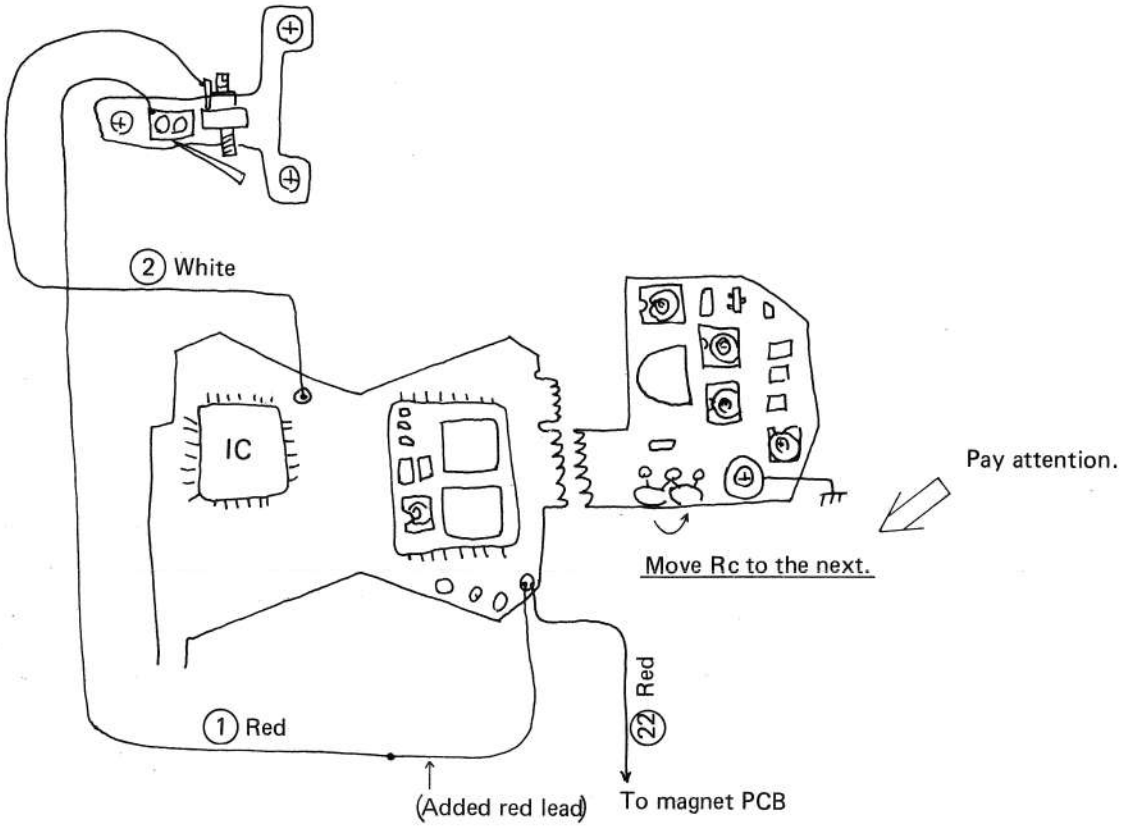

NOTE:

If the Sc switch chatters (between mirror up and 2nd shutter blind starting), bulb (B) may be resulted.

Minimize Sc switch chattering.

When the chattering cannot be eliminated, replace the Sc switch with a new one, or connect a capacitor to both terminals of the Sc switch to reduce the chattering. For the capacitor, an integration capacitor for Fujica ST-901 or capacitor of SA switch for Fujica ST-901 (1000pF to 4700pF) may be used.

6. Wiring for photocell

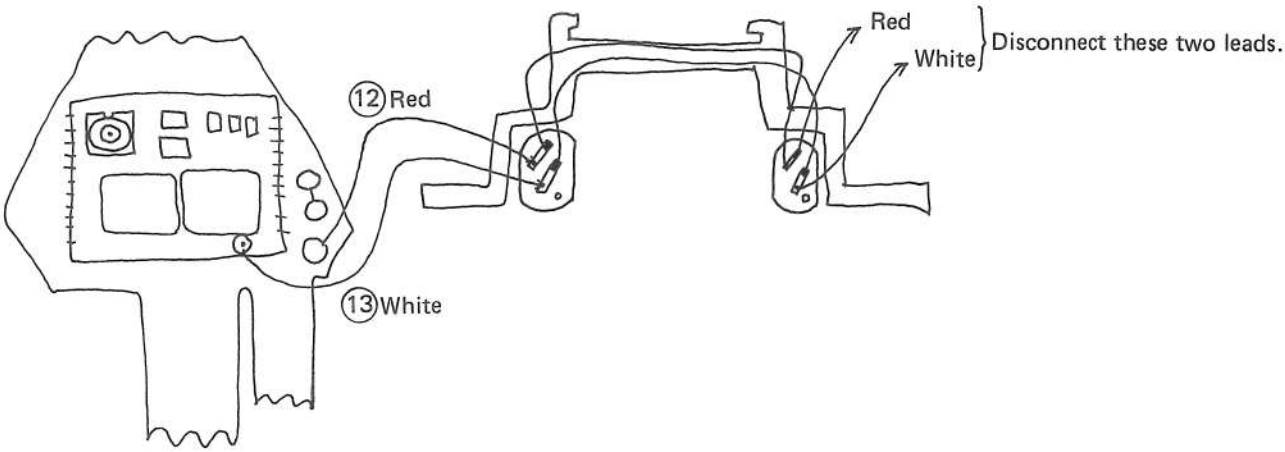

Disconnect the conventionally connected red and white leads, and connect leads ⑫ and ⑬ extended from the FPC of new type to the terminals from where the red and white leads have been disconnected.

(As a high impedance is required, be sure to thoroughly clean the photocell with freon after completing the wiring.)

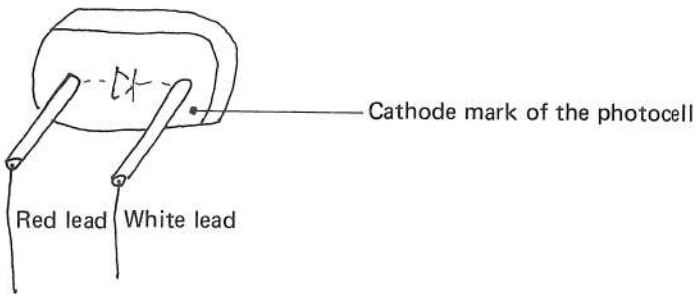

7. To prevent the parts on the FPC being shorted with the top cover of the camera, install insulation tape (Myler tape) on the top cover interior.

8. Adjusting interval

Electrical shutter speed is fixed at 1/1000 sec. by grounding terminal j (MON) of the FPC. Ground terminal j to ease the adjustment. (For LED display, both 500 and 1000 LEDs light.)

The adjusting procedure is the same as the conventional one. Use a shutter tester, and adjust the interval capacitor or shutter blind travelling velocity so that the interval is 1.00 msec.

After completing the adjustment, be sure to unground the terminal j without fail. (If grounded, automatic exposure cannot be obtained.)

9. Adjusting exposure

Normally, it is not necessary to touch VR3 as it has been adjusted completely. When exposure at each light value (LV4, LV7, LV11 and LV15) deviates the rating, exposure may be adjusted by turning VR3 and VR4 adequately.

10. The parts used commonly when the FPC is replaced with new type.

SM switch	H-PCB	S-value resistor
SN switch	G-PCB	F-value resistor
SA switch	M-PCB	Si Cell
SC switch	W-PCB	

VOLTAGE AT EACH POINT

IC: MB8855A-291

No.	Name	Function and voltage	
4	SELECT input	GND	
5	SA input	AE value locking	SA [ON] ≒ 0 [V] SA [OFF] ≒ Vw
6	S1 input	Circuit power switch	S1 [ON] ≒ 0.7 [V]
7 16	A/D converter input/output		
19	Circuit power supply (Vw)	S1 [ON]	..... Vcc ≒ Vw
20	Clock pulse input		
22	IC reset input	1 [V] or less	..... IC reset
		1/2Vw [V] or more	..... IC starts functioning
23	Sc input	Shutter sequence starts	
		Sc switch [ON] type	OFF ≒ 0 [V]
			ON ≒ Vw [V]
25	Monitor input	1 [V] or less	..... Manual 1/1000
		OPEN	..... AEL
27	Oscillation input	Reference shutter speed frequency (32.768kHz)	
33 39	LED output		
41	GND		
44	LED output		
45	2nd shutter blind output	2nd blind hold	..... 1 [V] or more
		2nd blind OFF	..... 0.5 [V] or less
46	Circuit self-hold output	S1 [ON]	..... 1 [V] or less
47	Sf1 input	1 [V] or less	..... Shutter speed fixed at 1/60 sec.

NOTE:

1. Measure voltage at each point across ground and checked terminal.
2. When checking voltage, be sure to turn on S1 (SN switch).

Fig. 10

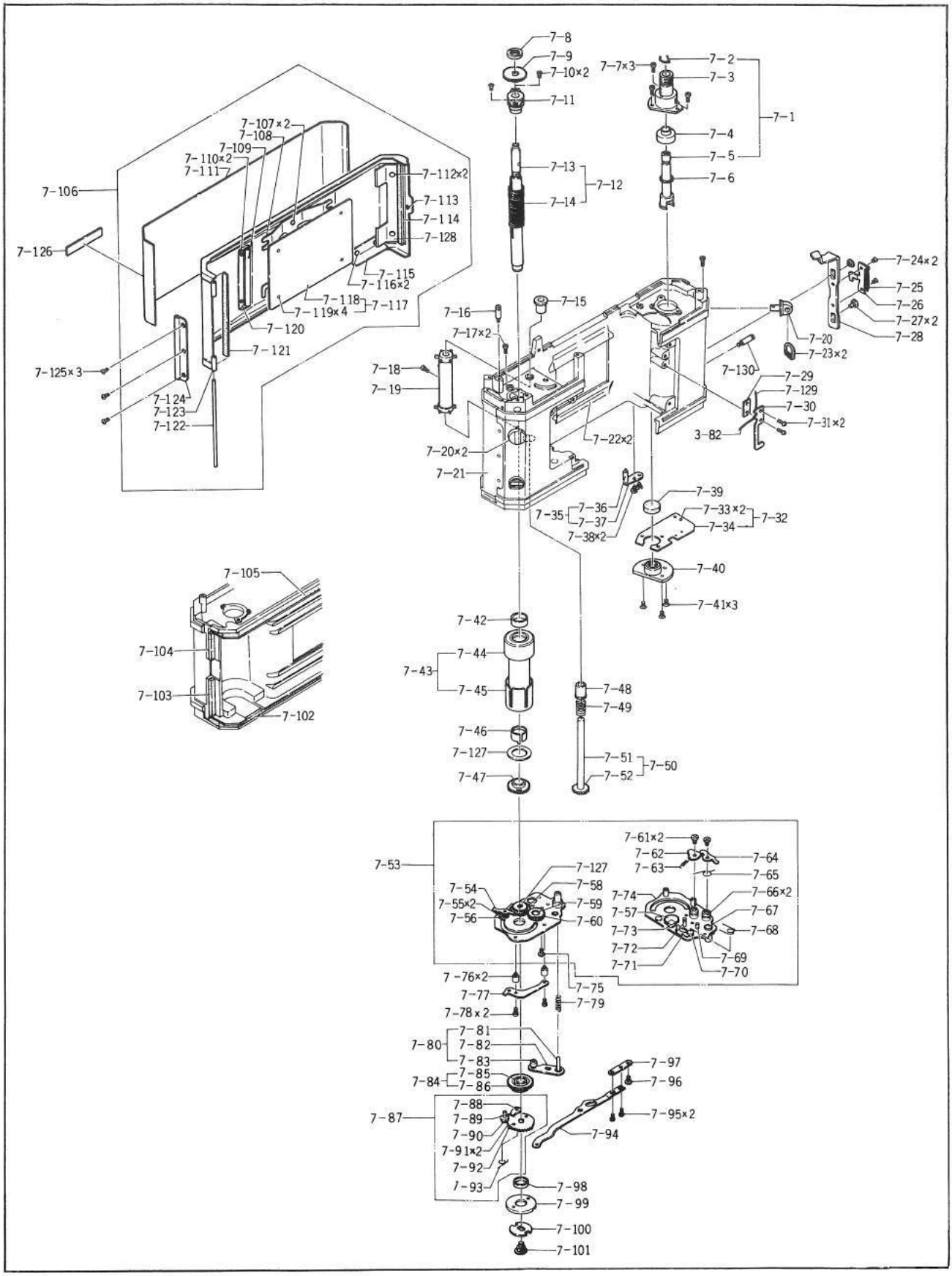
7-8
7-9
7-10×2
7-7×3
7-2
7-3
7-11
7-1
7-4
7-5
7-6
7-13
7-14
7-12
7-107×2
7-108
7-109
7-110×2
7-111
7-106
7-112×2
7-113
7-114
7-128
7-126
7-115
7-116×2
7-118
7-117
7-119×4
7-120
7-121
7-125×3
7-124
7-123
7-122
7-16
7-15
7-17×2
7-18
7-19
7-20×2
7-21
7-22×2
7-24×2
7-25
7-26
7-27×2
7-28
7-20
7-23×2
7-130
7-29
7-129
7-30
7-31×2
3-82
7-39
7-36
7-35
7-37
7-38×2
7-33×2
7-34
7-32
7-40
7-41×3
7-105
7-104
7-103
7-102
7-42
7-44
7-43
7-45
7-48
7-49
7-46
7-127
7-47
7-51
7-52
7-50
7-53
7-61×2
7-62
7-63
7-64
7-65
7-127
7-58
7-54
7-55×2
7-56
7-59
7-60
7-74
7-57
7-73
7-72
7-71
7-66×2
7-67
7-68
7-69
7-70
7-76×2
7-77
7-75
7-79
7-78×2
7-81
7-80
7-82
7-83
7-84
7-85
7-86
7-97
7-96
7-87
7-88
7-89
7-90
7-91×2
7-92
7-93
7-95×2
7-94
7-98
7-99
7-100
7-101

Ceramic PCB (Hybrid IC)

No.	Name	Function and Voltage
1	GND	
2 ~ 10	A/D converter input/output	
11	VT ADJ	About 0.66 [V]
12	VSF ADJ	About 0.3 [V]
13	A/D standard voltage	About 2.08 [V]
14	Circuit power supply (Vw)	Vcc ≒ Vw
16	Ph (—)	About 1/2 Phout
18	Phout	Photo-amplifier output
		LV7 ≒ 0.77 [V]
		LV11 ≒ 0.61 [V]
		LV15 ≒ 0.45 [V]
19	VSF output	S = 100, F = 5.6 ..... 1.3V (ADJ)
22	VT output	LV, S, F calculating output
		1 sec ≒ 1.5V, 1/1000 ≒ 1.1V: 40mV/EV
23	SV input	S25 ≒ 2.26V, S100 ≒ 2.02V,
		S400 ≒ 1.78V: 0.12V/EV
24	FV input	F1.4 ≒ 1.34V, F5.6 ≒ 1.8V
		F16 ≒ 2.15V: 0.12V/EV
25	Vref ADJ	Reference voltage adjusting input (1 to 1.5V)
27	Vref	Reference voltage output (2.50V)
28	Oscillation output	32.768kHz

Lead Wires

No.	Color	Length (mm)
①	Red	Connect red lead of a proper length to the presently used lead.
②	White	Cut the presently used lead into a proper length
③	Red	Use the presently used lead as is.
④	Yellow	86
⑤	Red	146
⑥	Black	40
⑦	Black	Cut the presently used lead into a proper length.
⑧	Green	Same as above
⑨	Gray	Same as above
⑩	Orange	55
⑪	Orange	Cut the presently used lead into a proper length.
⑫	Red	20 (Teflon covered)
⑬	White	30 (Teflon covered)
⑭	Yellow	90
⑮	Yellow	Cut the presently used lead into a proper length
⑯	Blue	Same as above.
⑰	Green	Same as above.
⑱	Gray	85
⑲	Gray	Cut the presently used lead into a proper length
⑳	White	55
㉑	Green	65
㉒	Red	Cut the presently used lead into a proper length
㉓	Black	Use the presently used lead as is.
㉔	Black	Same as above.
㉕	Orange	Same as above

DL83A-D Specifications for Adjustment of VR

Adjusting sequence	What to be adjusted	VR symbol	Checked terminal	Rating	
1	Reference voltage	VR2	FPC: ⓖ	2.500 ±0.001V	*Already adjusted
2	Oscillation	VR1	Thick coated PCB (q)	32.768 ±0.2KHz	*Already adjusted
3	Exposure	VR3		±1/3/10EV	* Already adjusted
4	Interval (Manual 1/1000 sec.)			1±0.1 msec	With terminal (j) grounded, select C_{INT} so that the shutter speed is 1 msec. When the adjustment is completed, unground terminal (j).
5	V_{SF} voltage	VR5	FPC: ⓡ	1.300 ±0.005V	Set shutter speed to 1/100, set aperture selector ring to F5.6, and use an F1.4/50mm lens, and adjust to 1.3V.
6	Exposure value	VR4		$0.08^{+0.002}_{-0}$msec	At AE mode, shutterspeed = 1/100, F=5.6, LV11, adjust to 0.08 1x-sec.

NOTE: *Normally, do not touch the VR.

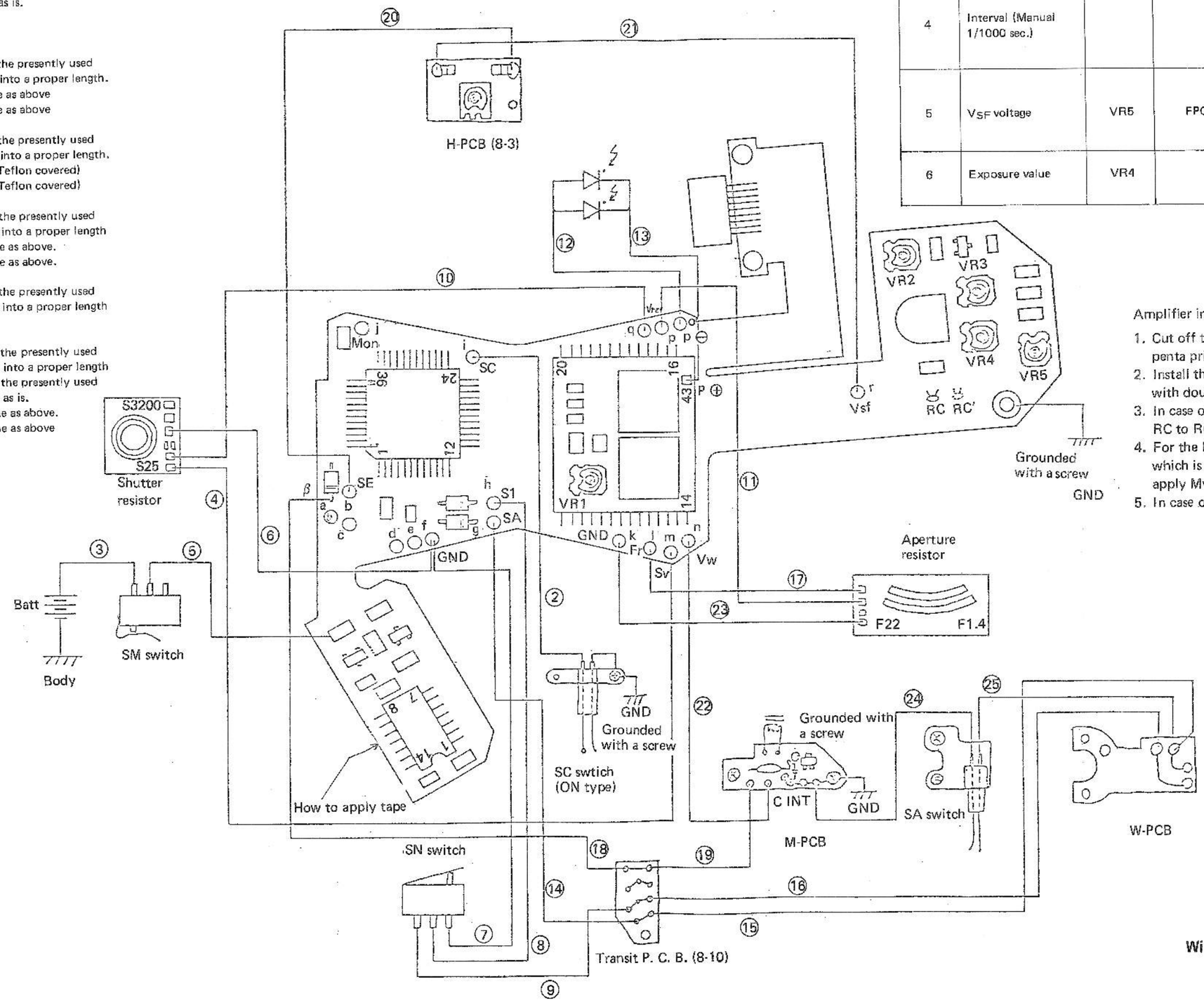

Amplifier installing procedure

1. Cut off the square projection on the summit of the penta prism holder.
2. Install the amplifier assembly (FPC) on the penta prism with double-sided adhesive tape.
3. In case of an SC switch open type, reinstall the resistor RC to RC' side.
4. For the lower portion of the amplifier assembly (FPC) which is positioned in the front face of the penta prism, apply Myler tape.
5. In case of an SC switch open (OFF) type, add lead (1).

Wiring Diagram

Blank Page

(Reverse of diagram when printed double sided)

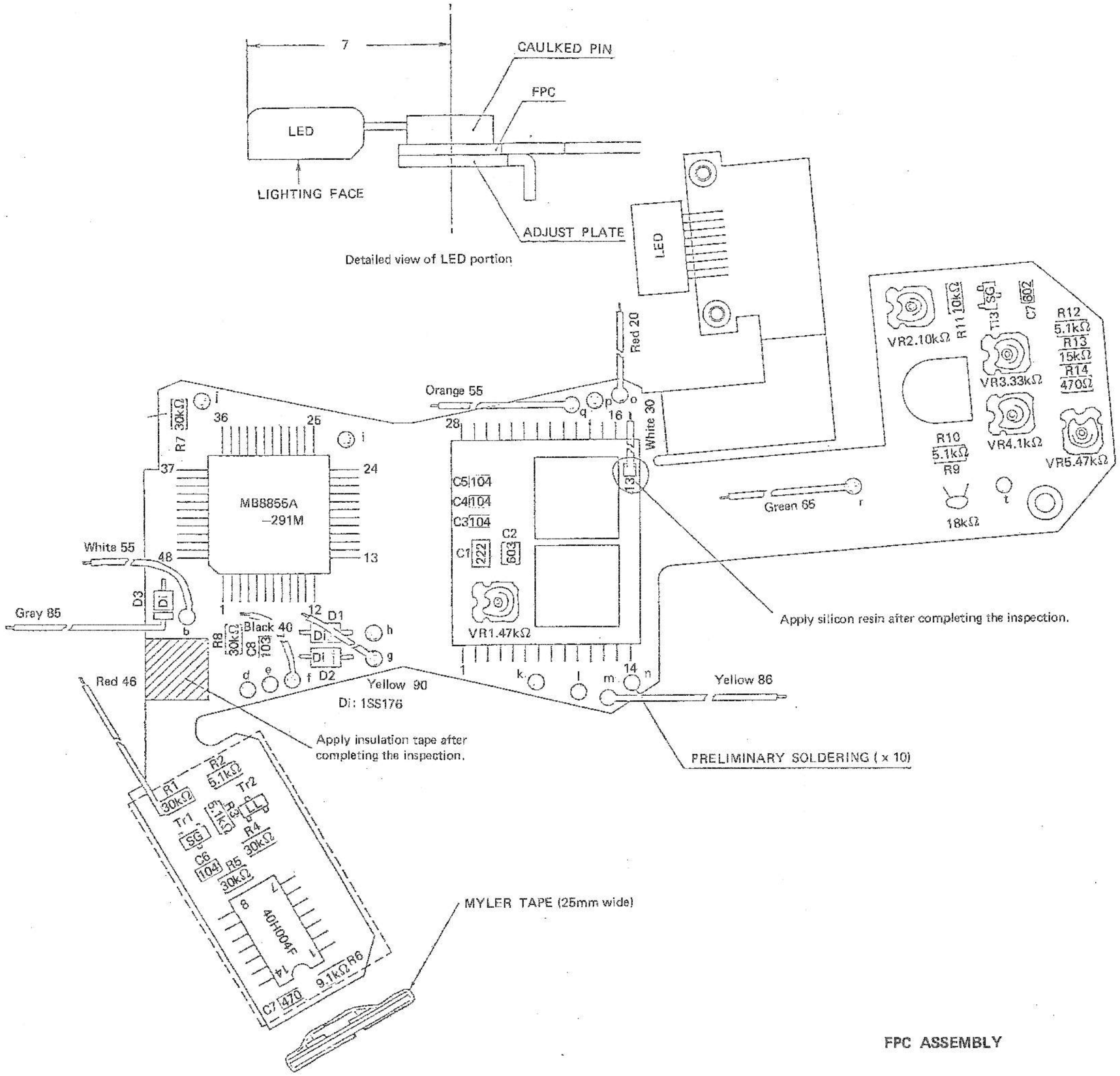

FPC ASSEMBLY

Blank Page

(Reverse of diagram when printed double sided)

Inside Back Cover
Blank Page

PRINTED IN JAPAN

1977. 8 - KIG

14 — 4 Sprocket (7 — 19)

a. Remove the base plate assembly (7 — 53).

b. Remove the set screw (7 — 18), and pull out the sprocket shaft assembly (7 — 50).

c. Remove the flange (7 — 15) and sleeve (7 — 48) from the main body (7 — 21), and then, remove the sprocket (7 — 19).

NOTE: The sprocket (7 — 19) cannot be removed unless the flange (7 — 15) and sleeve (7 — 48) are removed.

14 — 5 Rewind spindle assembly (7 — 1) and base plate (7 — 28)

a. Remove the three set screws (7 — 7), and remove the rewind spindle assembly (7 — 1).

b. Remove the spring (7 — 25) at the screw (7 — 130).

c. Remove the two set screws (7 — 24), and remove the key plate (7 — 26).

d. Remove the two guides (7 — 27), and remove the base plate (7 — 28) toward the upper direction.

Fig. 11

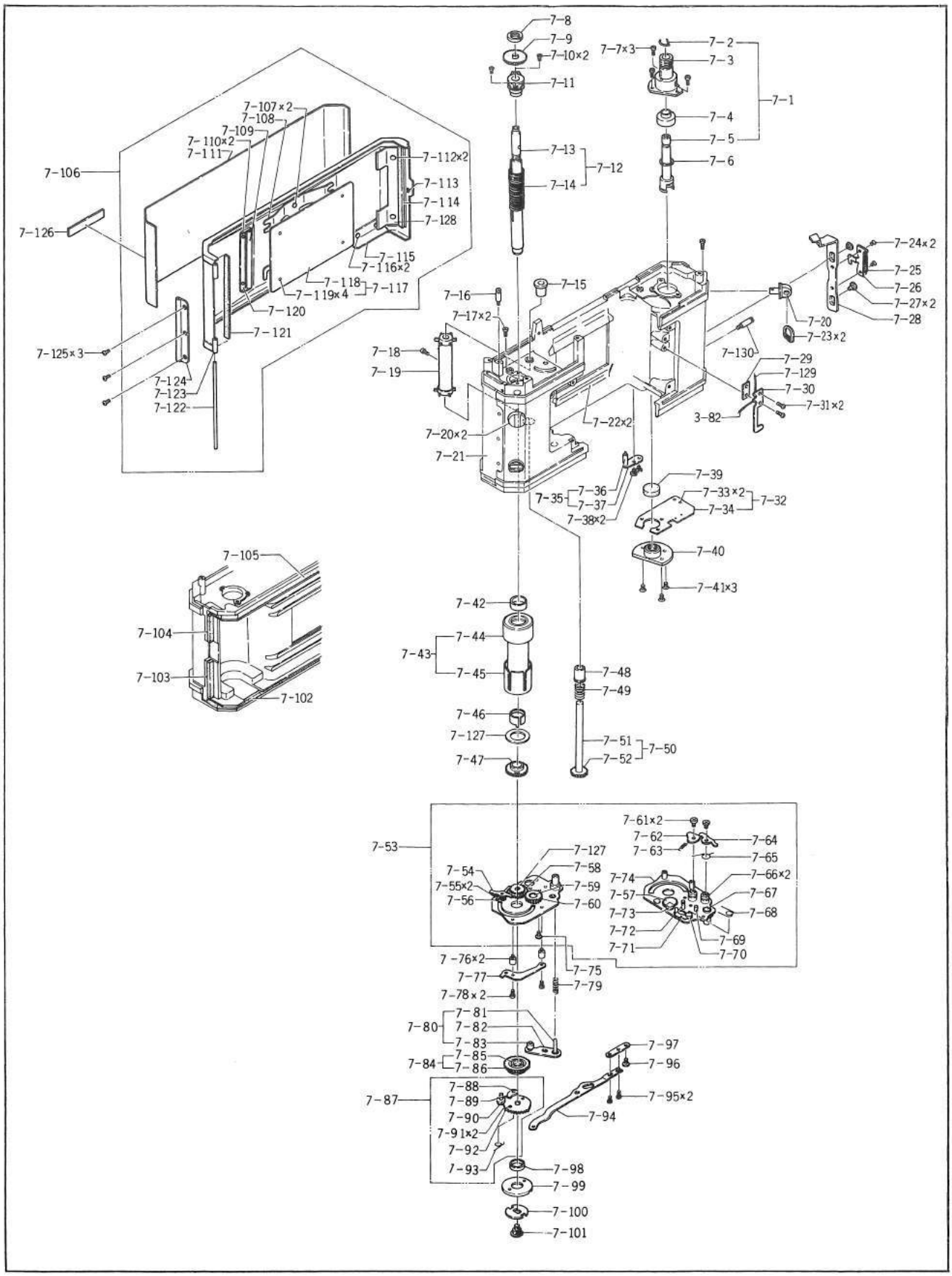
7-8
7-9
7-10×2
7-7×3
7-2
7-3
7-1
7-11
7-4
7-5
7-6
7-13
7-12
7-14
7-107×2
7-108
7-109
7-110×2
7-111
7-106
7-112×2
7-113
7-114
7-128
7-126
7-115
7-116×2
7-118
7-117
7-119×4
7-120
7-121
7-125×3
7-124
7-123
7-122
7-24×2
7-25
7-26
7-27×2
7-28
7-15
7-16
7-17×2
7-20
7-23×2
7-18
7-19
7-130
7-29
7-129
7-30
7-31×2
3-82
7-22×2
7-20×2
7-21
7-39
7-35
7-36
7-37
7-38×2
7-33×2
7-34
7-32
7-40
7-41×3
7-105
7-104
7-103
7-102
7-42
7-43
7-44
7-45
7-48
7-49
7-46
7-127
7-47
7-51
7-52
7-50
7-53
7-61×2
7-62
7-63
7-64
7-65
7-127
7-58
7-54
7-55×2
7-59
7-56
7-60
7-74
7-57
7-66×2
7-67
7-73
7-68
7-72
7-69
7-71
7-70
7-76×2
7-77
7-75
7-79
7-78×2
7-80
7-81
7-82
7-83
7-84
7-85
7-86
7-97
7-96
7-87
7-88
7-89
7-90
7-91×2
7-92
7-93
7-95×2
7-94
7-98
7-99
7-100
7-101

15. Disassembling focal Plane shutter assembly (3 – 29)

Before disassembling the focal plane shutter assembly, be sure to remove the magnet switch assembly (5 — 69), magnet lever assembly (5 — 85), lever assembly (5 — 95) and SA switch (8 — 9).

15 — 1 1st blind assembly (4 — 82) and 2nd blind assembly (4 — 83)

a. Remove the set screws (5 — 59 and 5 — 56) and claws (5 — 55 and 5 — 58) and release force of the main spring for the shutter blinds.

b. Hold the shutter blind shafts (4 — 72 and 4 — 78), and turn the ratchet wheels (5 — 54 and 5 — 57) clockwise to remove them.

c. Remove the set screw (5 — 53), and remove the gear (5 — 52).

d. Remove the two E - clips (4 — 30).

e. Remove the set screw (4 — 1), and remove the cam assembly (4 — 2) and 1st gear assembly (4 — 8).

f. Remove the two spring pins (4 — 28), and remove two gears (4 — 29).

g. Remove the four set screws (4 — 31) from the base plate (4 — 33) side.

h. Pull the shutter base plate assembly (4 — 32) to separate it from the mirror box.

i. Remove the 1st blind assembly (4 — 82) and 2nd blind assembly (4 — 83) carefully so as not to damage them and not to lose the rollers (two 4 — 70 and two 4 — 65) and washer (4 — 81).

Fig. 12 - 1

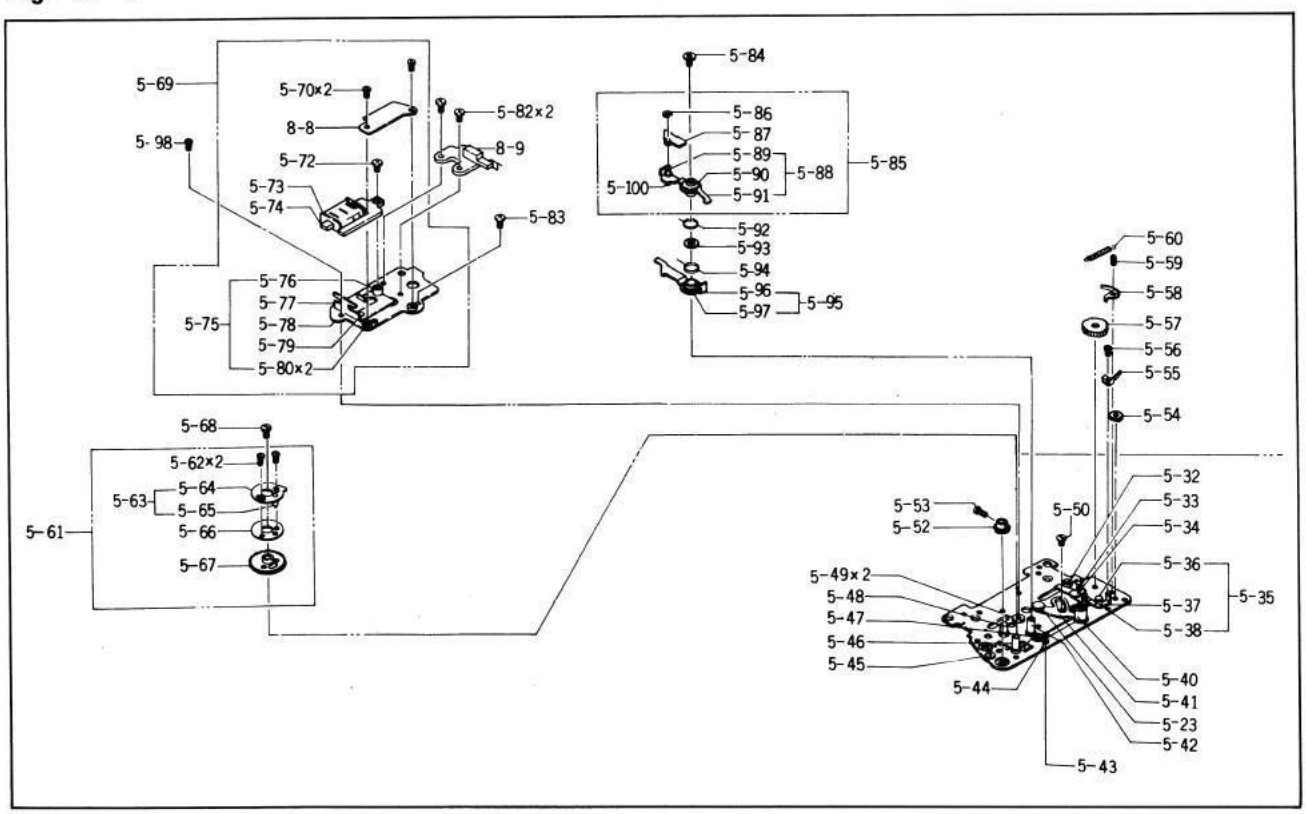

Fig. 12-2

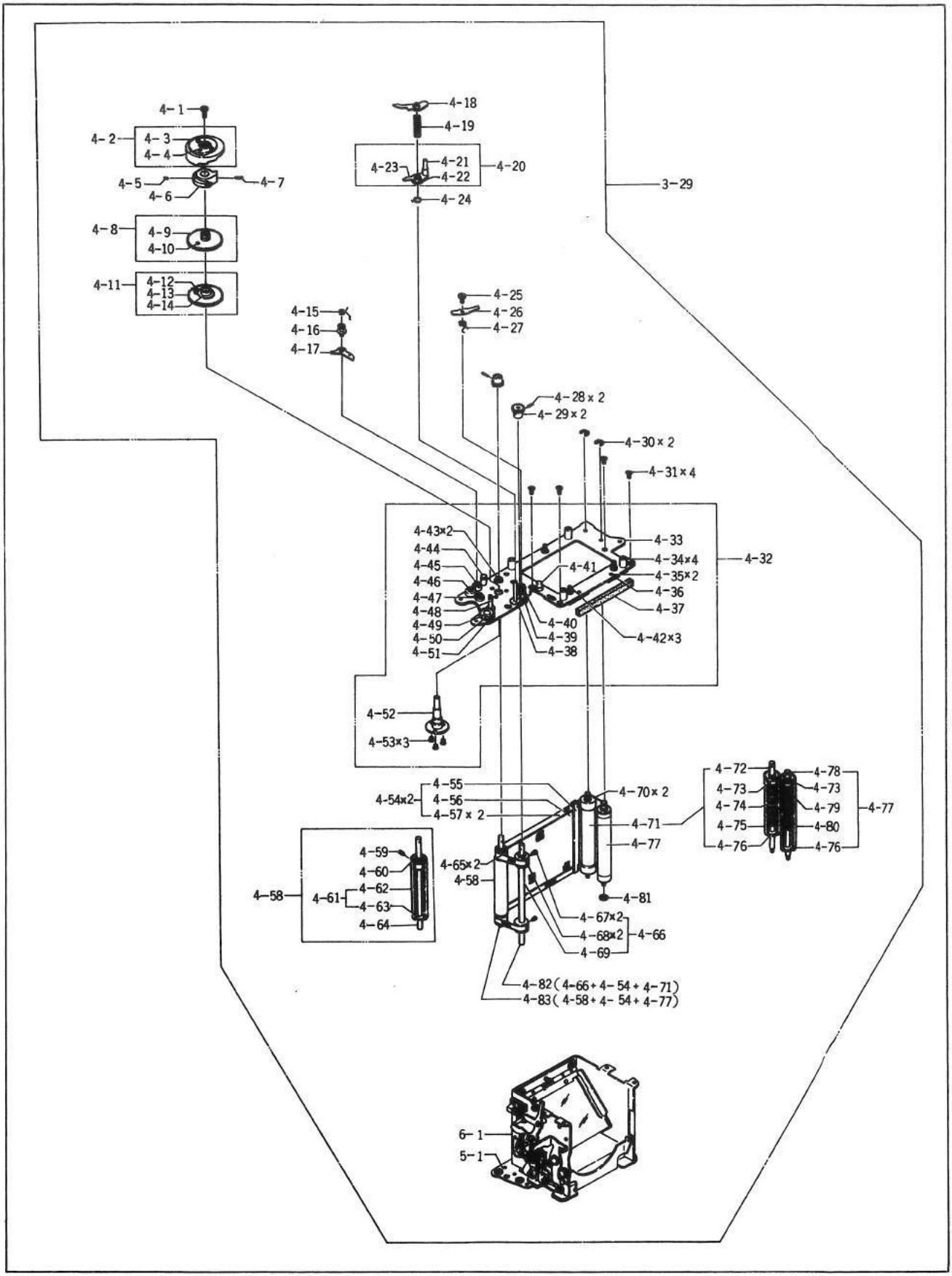
4-1
4-2
4-3
4-4
4-5
4-6
4-7
4-8
4-9
4-10
4-11
4-12
4-13
4-14
4-15
4-16
4-17
4-18
4-19
4-20
4-21
4-22
4-23
4-24
4-25
4-26
4-27
4-28 x 2
4-29 x 2
4-30 x 2
4-31 x 4
3-29
4-32
4-33
4-34x4
4-35x2
4-36
4-37
4-38
4-39
4-40
4-41
4-42x3
4-43x2
4-44
4-45
4-46
4-47
4-48
4-49
4-50
4-51
4-52
4-53x3
4-54x2
4-55
4-56
4-57 x 2
4-58
4-59
4-60
4-61
4-62
4-63
4-64
4-65x2
4-66
4-67x2
4-68x2
4-69
4-70x 2
4-71
4-72
4-73
4-74
4-75
4-76
4-77
4-78
4-79
4-80
4-81
4-82(4-66+4-54+4-71)
4-83(4-58+4-54+4-77)
6-1
5-1

15 — 2 Mirror set/quick return assembly (5 — 1)

(1) When removing the mirror set/quick return assembly after removing the parts up to the step 15 — 1 — i above:

a. Remove the four set screw (5 — 51).

b. Separate the mirror set/quick return assembly (5 — 1) from the mirror box assembly (6 — 1).

(2) When removing the mirror set/quick return assembly (5 — 1) from the focal plane shutter assembly (3 — 29) alone.

a. Remove the set screws (5 — 59 and 5 — 56), and remove the claws (5 — 58 and 5 — 55).

b. Remove the ratchet wheels (5 — 54 and 5 — 57) from the shafts.

c. Remove the set screw (5 — 53), and remove the gear (5 — 52).

d. Remove the four set screws (5 — 51).

e. Remove the mirror set/quick return assembly (5 — 1) carefully so as not to lose the rollers (4 — 70 and 4 — 65) and washer (4 — 81).

Fig. 13

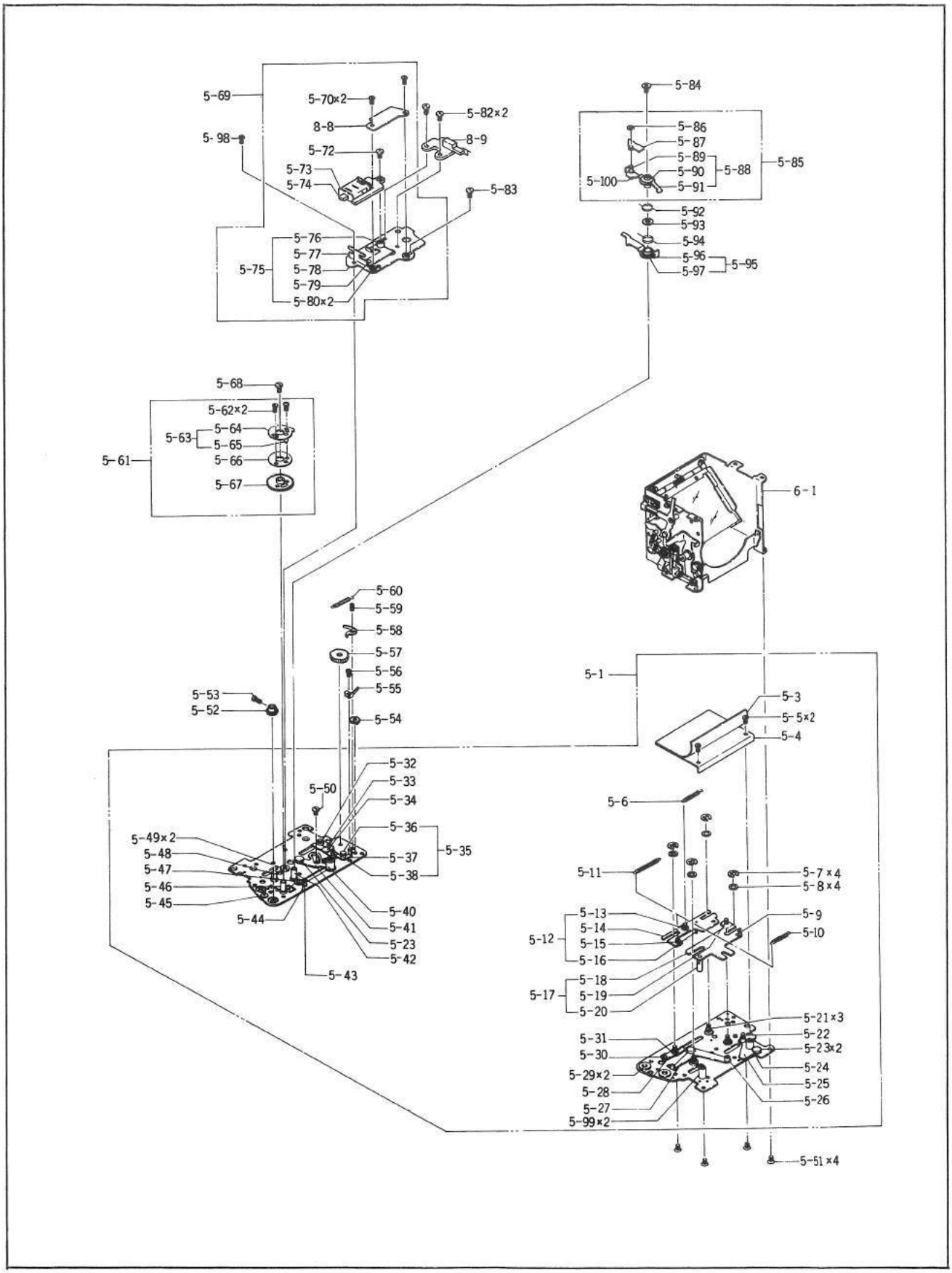
5-69
5-70×2
8-8
5-82×2
8-9
5-98
5-72
5-73
5-74
5-83
5-76
5-77
5-78
5-79
5-80×2
5-75
5-84
5-86
5-87
5-89
5-90
5-91
5-88
5-85
5-100
5-92
5-93
5-94
5-96
5-97
5-95
5-68
5-62×2
5-64
5-63
5-65
5-66
5-67
5-61
6-1
5-60
5-59
5-58
5-57
5-56
5-55
5-54
5-53
5-52
5-1
5-3
5-5×2
5-4
5-32
5-33
5-34
5-50
5-36
5-37
5-38
5-35
5-49×2
5-48
5-47
5-46
5-45
5-44
5-40
5-41
5-23
5-42
5-43
5-6
5-11
5-7×4
5-8×4
5-13
5-14
5-15
5-16
5-12
5-9
5-10
5-18
5-19
5-20
5-17
5-21×3
5-22
5-23×2
5-24
5-25
5-26
5-31
5-30
5-29×2
5-28
5-27
5-99×2
5-51×4

15 — 3 Mirror assembly (6 — 16)

a. Remove the blind (6 — 97).

b. Remove the two set screws (6 — 28).

c. Remove the mirror assembly (6 — 16) carefully so as not to damage the mirror (6 — 22).

15 — 4 Aperture resistor assembly (6 — 83)

a. Remove the set screws (6 — 87 and 6 — 86), and pull out the aperture resistor assembly.

b. Move the rotary plate assembly (6 — 77) toward the full aperture side so as to protect the contact (6 — 81) from deformation, and remove the aperture resistor assembly (6 — 83).

NOTE: Be careful not to deform or damage the contact (6 — 81) when reinstalling the aperture resistor assembly.

Fig. 14

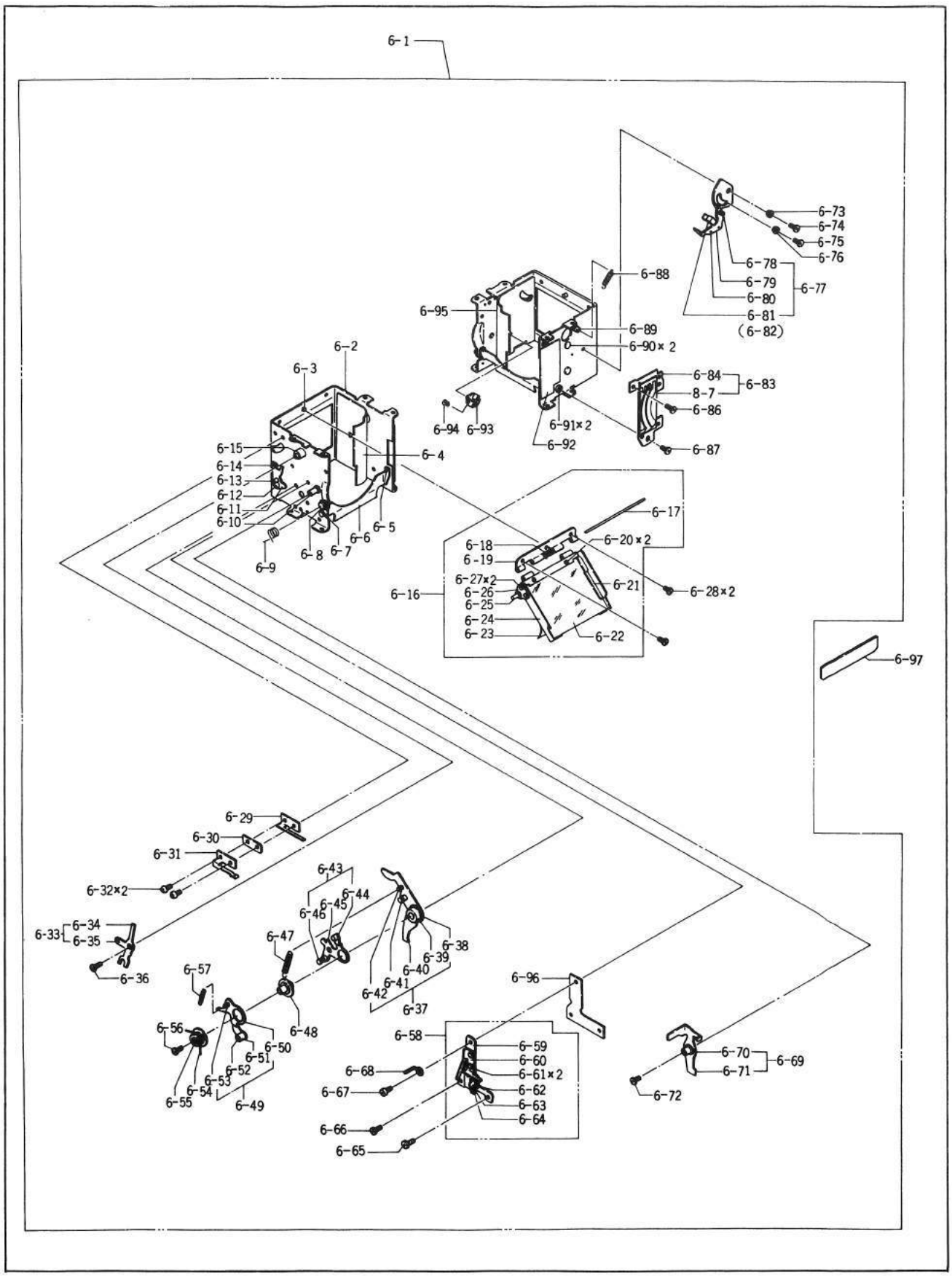
6-1
6-73
6-74
6-75
6-76
6-78
6-79
6-80
6-81
(6-82)
6-77
6-88
6-95
6-89
6-90×2
6-84
8-7
6-83
6-86
6-87
6-94
6-93
6-91×2
6-92
6-2
6-3
6-4
6-15
6-14
6-13
6-12
6-11
6-10
6-9
6-8
6-7
6-6
6-5
6-17
6-18
6-19
6-20×2
6-27×2
6-26
6-25
6-24
6-23
6-16
6-21
6-28×2
6-22
6-97
6-29
6-30
6-31
6-32×2
6-33
6-34
6-35
6-36
6-43
6-44
6-45
6-46
6-47
6-38
6-39
6-40
6-41
6-42
6-37
6-57
6-56
6-48
6-50
6-51
6-52
6-53
6-54
6-55
6-49
6-96
6-58
6-59
6-60
6-61×2
6-62
6-63
6-64
6-68
6-67
6-66
6-65
6-70
6-71
6-69
6-72

Ⅲ REASSEMBLY, REPAIR AND ADJUSTMENT

1. Main body

1 — 1 Spring (7 — 14)

a. Check the spring (7 — 14) to insure that it is coated with molybdenum.

b. Do not apply grease to this spring. If this spring is gerased, spool friction may drop.

1 — 2 Screw ring (7 — 8)

Tighten firmly and lock the thread with Pliobond.

1 — 3 Gears

Grease the gear shafts only with Helicolube/Molycote mixed grease.

Do not grease the gear teeth. If the gear teeth are greased, spool fritcion may drop.

1 — 4 Take-up spindle assembly (7 — 12)

a. Insert the spring (7 — 14) into the groove of the spool holder (7 — 11).

b. Install the bushing (7 — 42), spool assembly (7 — 43), washer (7 — 127) and spur gear (7 — 47).

c. Install the sprocket (7 — 19) and sprocket shaft assembly (7 — 50).

d. Install the base plate assembly (7 — 53), and tighten it with the set screw (7 — 75) and two screws (7 — 76).

e. Turn the sprocket and make sure that the gears turn smoothly.

f. Turn the take-up spindle assembly (7 — 12) toward the film advancing direction 2 — 1/2 turns so that the spring (7 — 14) is provided with a spring force.

g. Place the ratchet wheel assembly (7 — 84) on the base plate assembly (7 — 53), and install the ratchet assembly (7 — 87), Make sure that the square end of the take-up spindle (7 — 13) is fitted into the square hold of the ratchet plate (7 — 92) tightly. Note that if this fitting is loose, film will not be advanced completely. If the fitting is too loose, replace the approprite parts with new ones or reduce dimensions of the square hole by tapping it with a small hammer.

h. Install the connecting plate (7 — 100), and tighten it with the set screw (7 — 101). The screw head is treated for external appearance.

Be careful not to scratch or scur the screw head. Lock the thread with Araldite.

Fig. 15

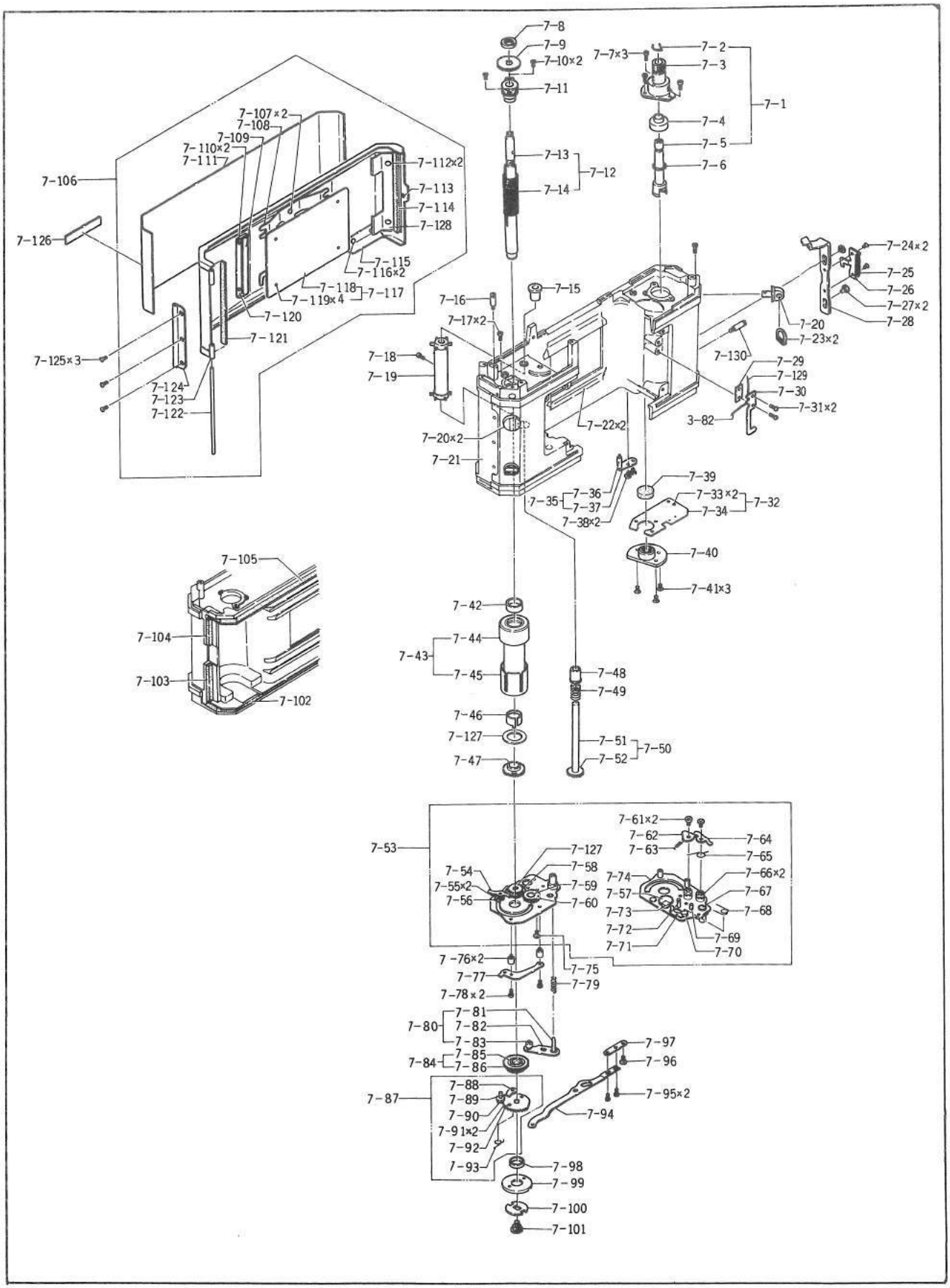
7-8
7-9
7-10×2
7-11
7-7×3
7-2
7-3
7-1
7-4
7-5
7-6
7-13
7-14
7-12
7-107×2
7-108
7-109
7-110×2
7-111
7-106
7-112×2
7-113
7-114
7-128
7-126
7-115
7-116×2
7-118
7-117
7-119×4
7-120
7-121
7-125×3
7-124
7-123
7-122
7-16
7-17×2
7-15
7-18
7-19
7-20×2
7-21
7-22×2
7-24×2
7-25
7-26
7-27×2
7-28
7-20
7-23×2
7-130
7-29
7-129
7-30
7-31×2
3-82
7-39
7-35
7-36
7-37
7-38×2
7-33×2
7-34
7-32
7-40
7-41×3
7-105
7-104
7-103
7-102
7-42
7-43
7-44
7-45
7-48
7-49
7-46
7-127
7-47
7-51
7-52
7-50
7-53
7-61×2
7-62
7-63
7-64
7-65
7-54
7-55×2
7-56
7-127
7-58
7-59
7-60
7-74
7-57
7-73
7-72
7-71
7-66×2
7-67
7-68
7-69
7-70
7-76×2
7-77
7-75
7-79
7-78×2
7-80
7-81
7-82
7-83
7-84
7-85
7-86
7-87
7-88
7-89
7-90
7-91×2
7-92
7-93
7-97
7-96
7-95×2
7-94
7-98
7-99
7-100
7-101

1 — 5 Spool (7 — 45)

The rated friction of the spool is 200 to 450 grams. (= 100 to 250 gr - cm).

a. Measurement

Wind a string around the spool (7 — 45) at its 10 mm OD portion, wind up the film advance lever, and measure the force at which the spool slips.

b. Adjustment

When adjusting friction of the spool, adjust slipping force between the spool (7 — 45) and friction plate (7 — 46).

NOTE:

- Apply silicon grease G30M.
- The spool (7 — 45) is made of duracon. Do not use spool made of other than duracon (those used for ST701, ST605, ST705, ST801 and ST901) because with those spools made of other than duracon, a sufficient friction will not be obtained.
- Spools made of duracon can be identified from those of other material with the black glossy exterior while others are non - gloosy.
- Spools made of duracon may be used for other model cameras.

1 — 6 Sprocket (7 — 19)

a. Depress the film rewind button assembly (7 — 80), and make sure that the sprocket turns idle.

b. Without depressing the film rewind button assembly (7 — 80), make sure that the sprocket does not turn reversely.

Fig. 16

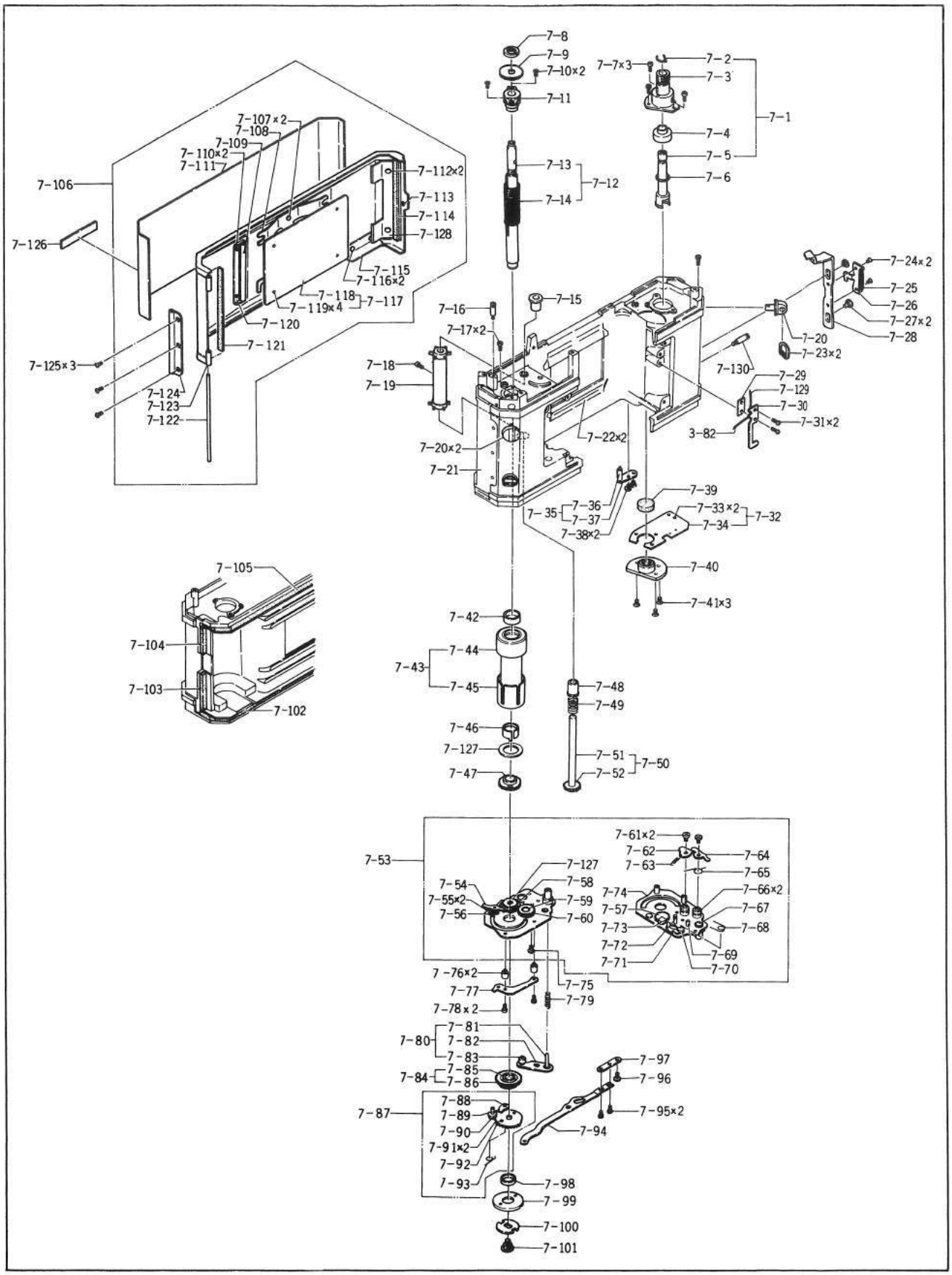
7-8
7-9
7-10×2
7-7×3
7-2
7-3
7-11
7-1
7-4
7-5
7-6
7-13
7-12
7-14
7-107×2
7-108
7-109
7-110×2
7-111
7-112×2
7-106
7-113
7-114
7-128
7-126
7-115
7-116×2
7-118
7-117
7-119×4
7-120
7-121
7-125×3
7-124
7-123
7-122
7-24×2
7-25
7-26
7-27×2
7-28
7-15
7-16
7-17×2
7-20
7-23×2
7-130
7-18
7-19
7-29
7-129
7-30
7-31×2
3-82
7-22×2
7-20×2
7-21
7-39
7-35
7-36
7-37
7-33×2
7-32
7-34
7-38×2
7-40
7-41×3
7-105
7-42
7-104
7-44
7-43
7-45
7-103
7-102
7-48
7-49
7-46
7-127
7-51
7-50
7-52
7-47
7-53
7-61×2
7-62
7-63
7-64
7-65
7-127
7-58
7-54
7-55×2
7-59
7-56
7-60
7-74
7-66×2
7-57
7-67
7-73
7-68
7-72
7-69
7-71
7-70
7-76×2
7-75
7-77
7-79
7-78×2
7-81
7-80
7-82
7-83
7-97
7-85
7-84
7-86
7-96
7-88
7-87
7-89
7-95×2
7-90
7-94
7-91×2
7-92
7-93
7-98
7-99
7-100
7-101

1 — 7 Rewind spindle assembly (7 — 1)

a. Make sure that friction of the rewind spindle assembly is 15 to 50 gr-cm.

b. When adjustment of friction is needed, adjust the spring (7 — 2).

c. Pull up the rewind spindle (7 — 5), and make sure that the film chamber door assembly (7 — 106) opens smoothly.

d. When the film chamber door does not open, check the film chamber door assembly and main body for their fittings.

e. Further, make sure that the moquette for the fiml chamber door assembly and moquette for the main body are installed in their correct positions. The film chamber door will not open if any of the moquette is in an incorrect position.

1 — 8 Film chamber door assembly (7 — 106)

a. Install the film chamber door assembly (7 — 106) securely with three set screws (7 — 125).

b. Check the roller (7 — 109) and pressure plate (7 — 118) to insure that they are not scarred or scratched.

c. Make sure that the roller turns smoothly.

d. Make sure that the pressure plate (7 — 118) moves smoothly with the leaf spring (7 — 108).

1 — 9 Neck strap eyelet (7 — 20)

Tighten the neck strap eyelet securely with the set screw (7 — 17), and lock the set screw with Araldite.

Fig. 17

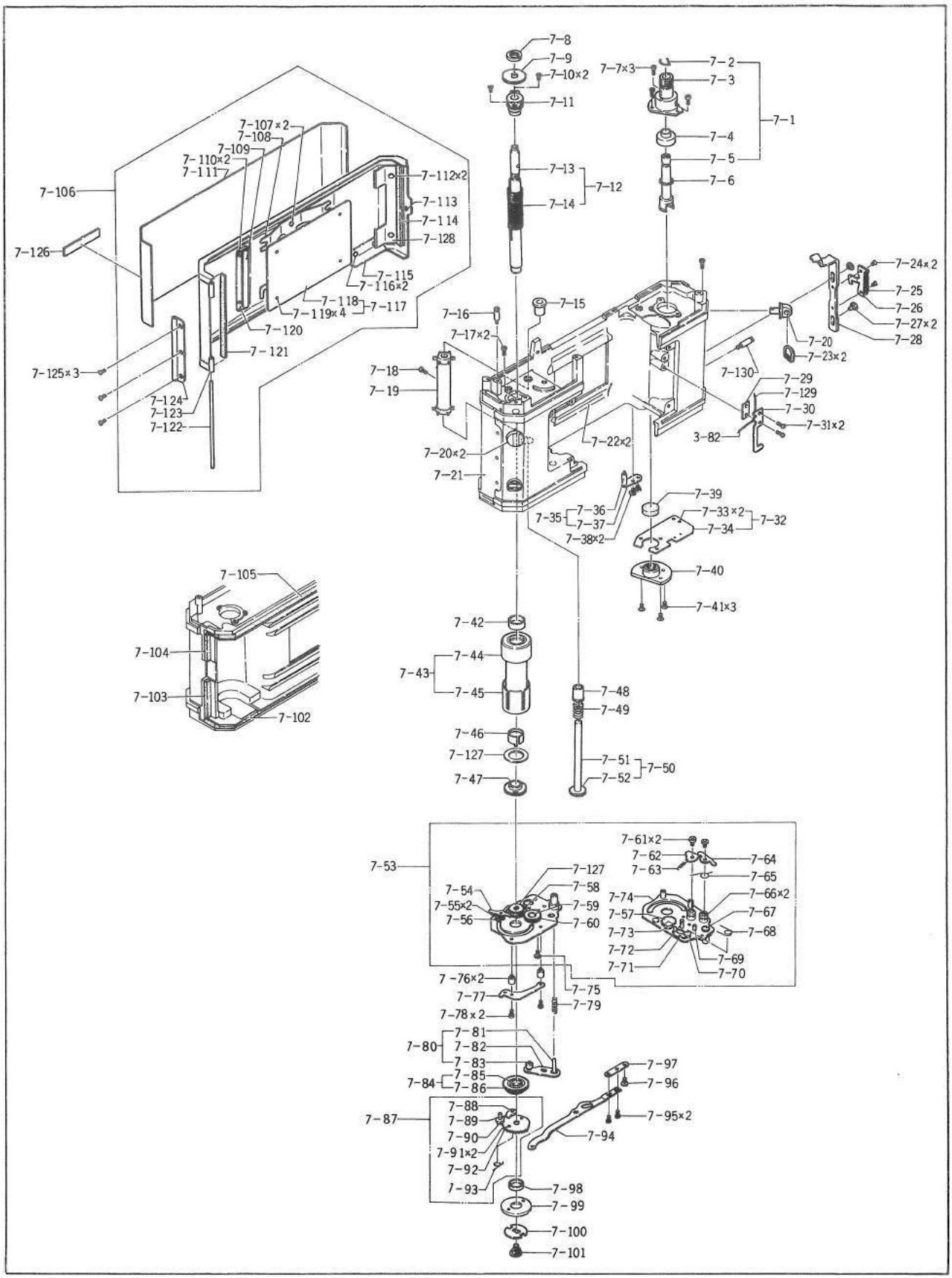
7-8
7-9
7-10×2
7-7×3
7-2
7-3
7-1
7-11
7-4
7-5
7-6
7-13
7-12
7-14
7-107×2
7-108
7-109
7-110×2
7-111
7-112×2
7-106
7-113
7-114
7-128
7-126
7-115
7-116×2
7-118
7-117
7-119×4
7-120
7-121
7-125×3
7-124
7-123
7-122
7-16
7-15
7-17×2
7-18
7-19
7-20×2
7-21
7-22×2
7-24×2
7-25
7-26
7-27×2
7-28
7-20
7-23×2
7-130
7-29
7-129
7-30
7-31×2
3-82
7-39
7-35
7-36
7-37
7-38×2
7-33×2
7-34
7-32
7-40
7-41×3
7-105
7-104
7-103
7-102
7-42
7-43
7-44
7-45
7-48
7-49
7-46
7-127
7-47
7-51
7-52
7-50
7-53
7-61×2
7-62
7-63
7-64
7-65
7-127
7-58
7-54
7-55×2
7-56
7-59
7-60
7-74
7-57
7-73
7-72
7-71
7-66×2
7-67
7-68
7-69
7-70
7-76×2
7-77
7-75
7-79
7-78×2
7-80
7-81
7-82
7-83
7-84
7-85
7-86
7-87
7-88
7-89
7-90
7-91×2
7-92
7-93
7-97
7-96
7-95×2
7-94
7-98
7-99
7-100
7-101

2. Focal plane shutter assembly

2 — 1 Mirror set/quick return assembly (5 — 1)

a. Check all the caulked parts to insure that they are caulked securely.

b. Apply Helicolube/Molycote mixed grease to the springs (5 — 6, 5 — 10, and 5 — 11) sufficiently to erase metalic sound from them.

c. Make sure that the interlock plate assemblies (5 — 12 and 5 — 17) are operated smoothly by the springs. Further, make sure that the interlock plates are flat. If they are warped, they will not move completely.

d. Make sure that the hook lever (5 — 28) is operated smoothly by the spring (5 — 44).

- If any grease film is formed between the hook lever and base plate (5 — 24), clean it out. Existence of the grease will cause malfunction of the hook lever.
- Do not use grease but apply silicon oil #20 slightly.
- If the hook lever stops in a half way, properly bend the hook lever (5 — 28) so taht there is a slight gap between the hook lever and base plate. In this case, note that height of the pin (5 — 30) is limited.
- Make sure that the hook lever (5 — 28) catches the pin (5 — 16) of the interlock plate (5 — 12) correctly.

e. Make sure that the lever assembly (5 — 35) operates smoothly without any dragging.

Fig. 18

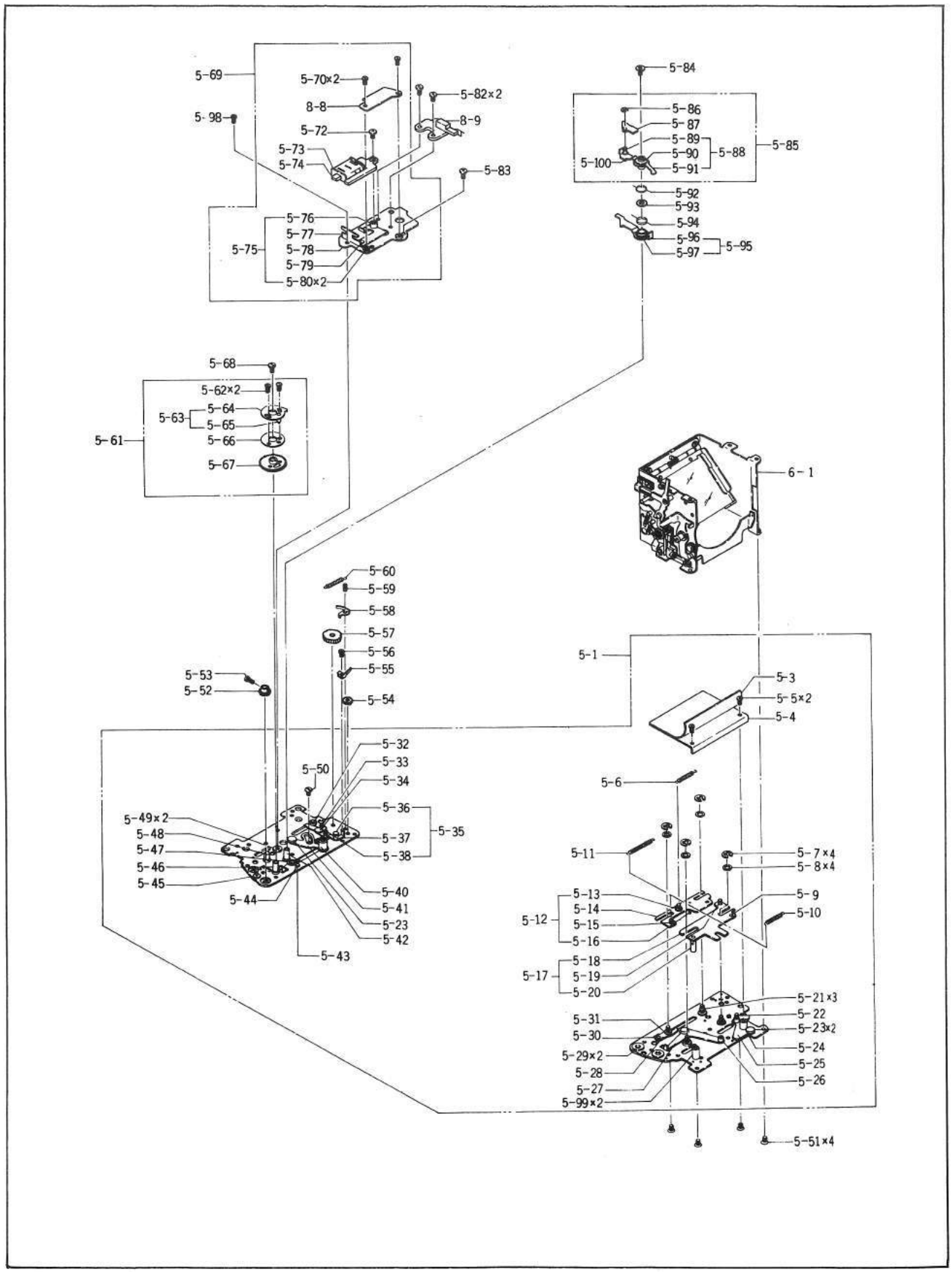
5-69
5-70×2
8-8
5-82×2
8-9
5-98
5-72
5-73
5-74
5-83
5-76
5-77
5-78
5-79
5-80×2
5-75
5-84
5-86
5-87
5-89
5-90
5-91
5-88
5-85
5-100
5-92
5-93
5-94
5-96
5-97
5-95
5-68
5-62×2
5-64
5-63
5-65
5-66
5-67
5-61
6-1
5-60
5-59
5-58
5-57
5-56
5-55
5-54
5-53
5-52
5-1
5-3
5-5×2
5-4
5-32
5-33
5-34
5-50
5-36
5-49×2
5-48
5-47
5-46
5-45
5-37
5-38
5-35
5-44
5-40
5-41
5-23
5-42
5-43
5-6
5-11
5-7×4
5-8×4
5-13
5-14
5-15
5-16
5-12
5-9
5-10
5-18
5-19
5-20
5-17
5-21×3
5-22
5-23×2
5-31
5-30
5-24
5-29×2
5-25
5-28
5-26
5-27
5-99×2
5-51×4

2 — 2 Mirror box assembly (6 — 1) and mirror set/quick return assembly (5 — 1)

a. Hold the pin (5 — 20) of the interlock plate assemby (5 — 17), move the interlock shaft (5 — 40) toward the mirror setting direction to set up the mirror set/quick return assembly (5 — 1), release the pin (5 — 20) and make sure that the mirror assembly (6 — 16) rises smoothly.

b. Make sure that the SC switch assembly (6 — 58) turns off when the mirror goes up to a half way.

NOTE: Refer to III — 7 — Adjustment of SC switch.

c. Release the hook lever (5 — 28), and make sure that the mirror assembly (6 — 16) comes down smoothly.

d. Make sure that the spring (6 — 18) has been provided with a proper spring force.

e. Check the springs of the mirror set/quick return assembly (5 — 1) to insure that the spring forces are sufficient to raise the mirror completely.

2 — 3 Shaft holders (5 — 29×2 and 4 — 43× 2)

a. Do not clean these shaft holders because oil - less metal is used for these shaft holders.

b. When lubrication is needed, apply silicon oil #20 slightly to these shaft holders.

Fig. 19

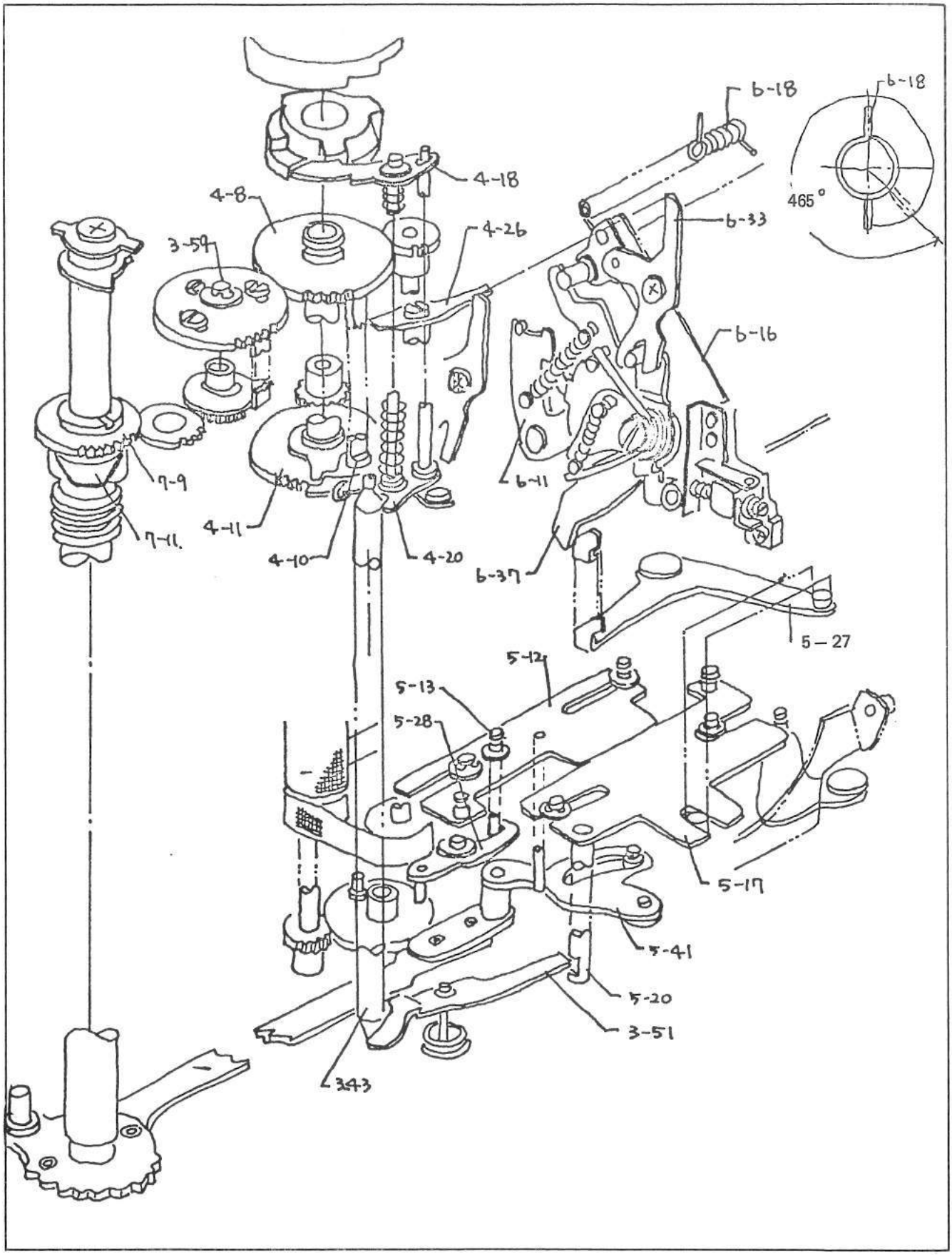
b-18
b-18
465°
4-18
4-8
4-26
3-54
b-33
b-16
7-9
7-11
4-11
4-10
4-20
b-11
b-37
5-27
5-12
5-13
5-28
5-17
5-41
5-20
3-51
3-43

2 — 4 Adjusting positions of the 1st and 2nd blinds

a. Position of 2nd blind

- Adjust gap between the wall of the mirror box (6 — 2) and end of the fixture (4 — 55) to 3.5 to 4.0 mm.
- With the stop lever assembly (4 — 20) engaged with the hook plate (4 — 14), replace the 2nd gear assembly (4 — 11) with one of another size, and thus, adjust the gap.

b. Position of 1st blind

- Match the 1st blind fixture with the 2nd blind fixture, and adjust the gap to 0 to 0.8 mm as shown in Fig. 20.
- With the claw (4 — 26) engaged with the connecting pin (4 — 10), replace the 1st gear assembly (4 — 8) with one of another size, and thus, adjust the gap.

c. At the time of adjustment, make sure that the 1st and 2nd blinds are provided respectively with 3 — 1/2 and 1 — 1/2 turns of extra windings.

d. Special Note

The time between a turn - off of the SC switch and starting of an exposure by the 1st blind is rated at 10 msec., and the time between a turn - off of the magnet and ending of the exposure by the 2nd blind is rated at 9 msec. In other words, there is a 1 msec. delay time, and this delay time is provided by adjusting positions of the 1st and 2nd blinds as described in 2 — 4 — a and b above. Unless this delay timing is correct, an erroneous exposure will result because electrical control cannot be accomplished when the camera is operated under an automatic exposure mode.

Fig. 20

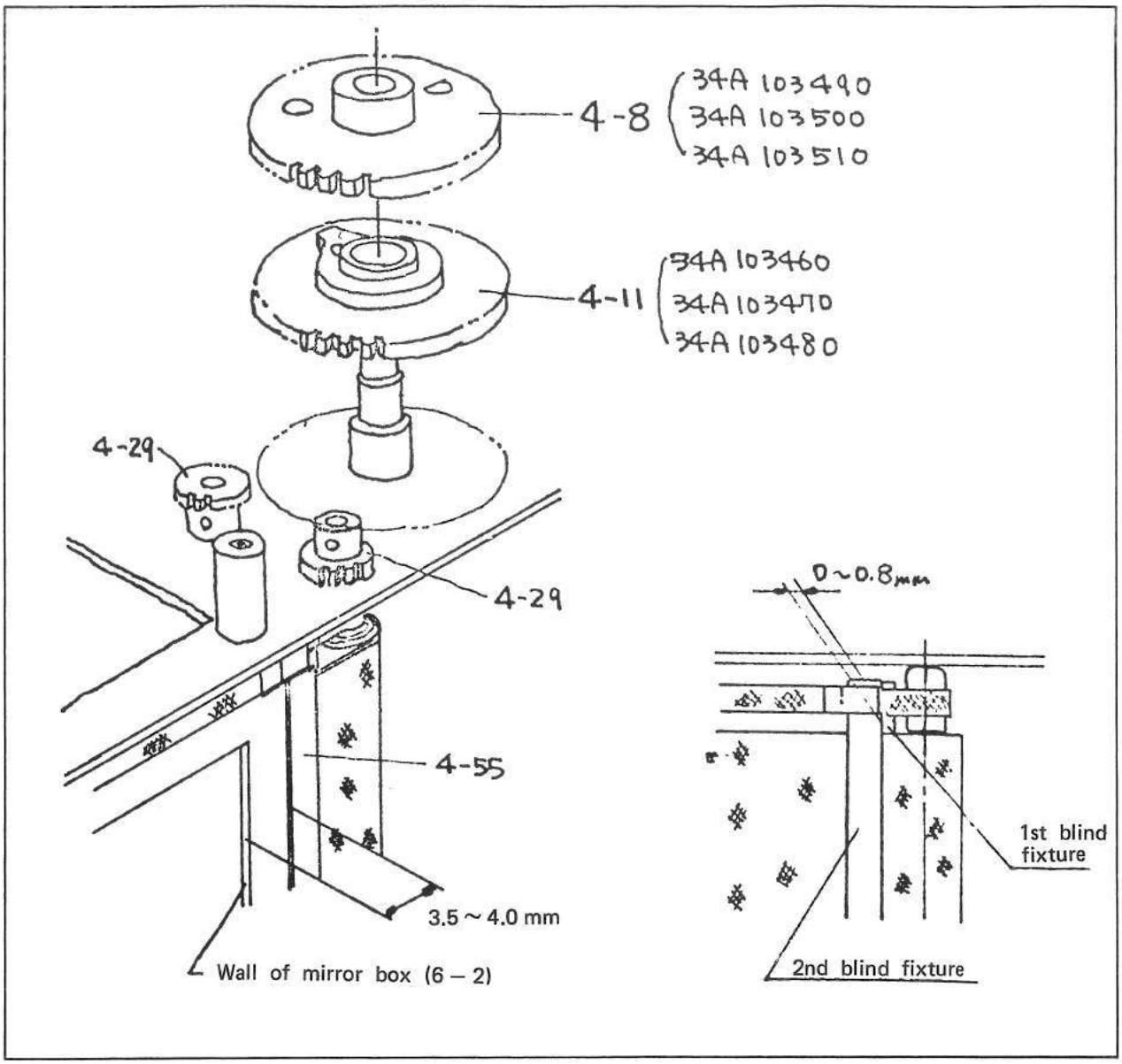
4-8
34A 103490
34A 103500
34A 103510
4-11
34A 103460
34A 103470
34A 103480
4-29
4-29
4-55
3.5 ~ 4.0 mm
Wall of mirror box (6 – 2)
0 ~ 0.8mm
1st blind fixture
2nd blind fixture

3. Focal plane shutter assembly (3 – 29)

3 – 1 Installing focal plane shutter assembly on the camera body

a. Set the shutter blinds to their completely wound up positions.

b. Place the focal plane shutter assebmly into the camera body carefully.

c. Fit the positioning pin (5 – 45) into the opening on the base plate (7 – 74).

d. Securely tighten the four set screws (3 – 27).

e. Install the positioning plate assembly (7 – 35).

3 – 2 Installing mirror start lever (3 – 51) and brake lever (3 – 49)

a. Apply Helicolube/Molycote mixed grease to the shafts.

b. Apply Helicolube/Molycote mixed grease to the sliding surfaces.

c. Securely tighten the screw (3 – 48).

3 – 3 Installing self - timer assembly (3 – 41), lower shutter release shaft (3 – 43) and shutter release shaft assembly (3 – 52).

a. Install the self - timer assembly (3 – 41), and insert the spring (3 – 42) and lower shutter release shaft (3 – 43) into the opening of the camera body.

b. Place the shutter release shaft assembly (3 – 52) into the camera body from the upper side of the camera body, and tighten the screw after applying Pliobond to the thread to lock it.

c. Tighten the two set screws (3 – 40) carefully so as not to lose them.

NOTE: Carry out the above described installation work without setting the mirror setting mechanism because if the mirror setting mechanism has been set completely, the shutter operates as the shutter release shaft is depressed.

Fig. 21

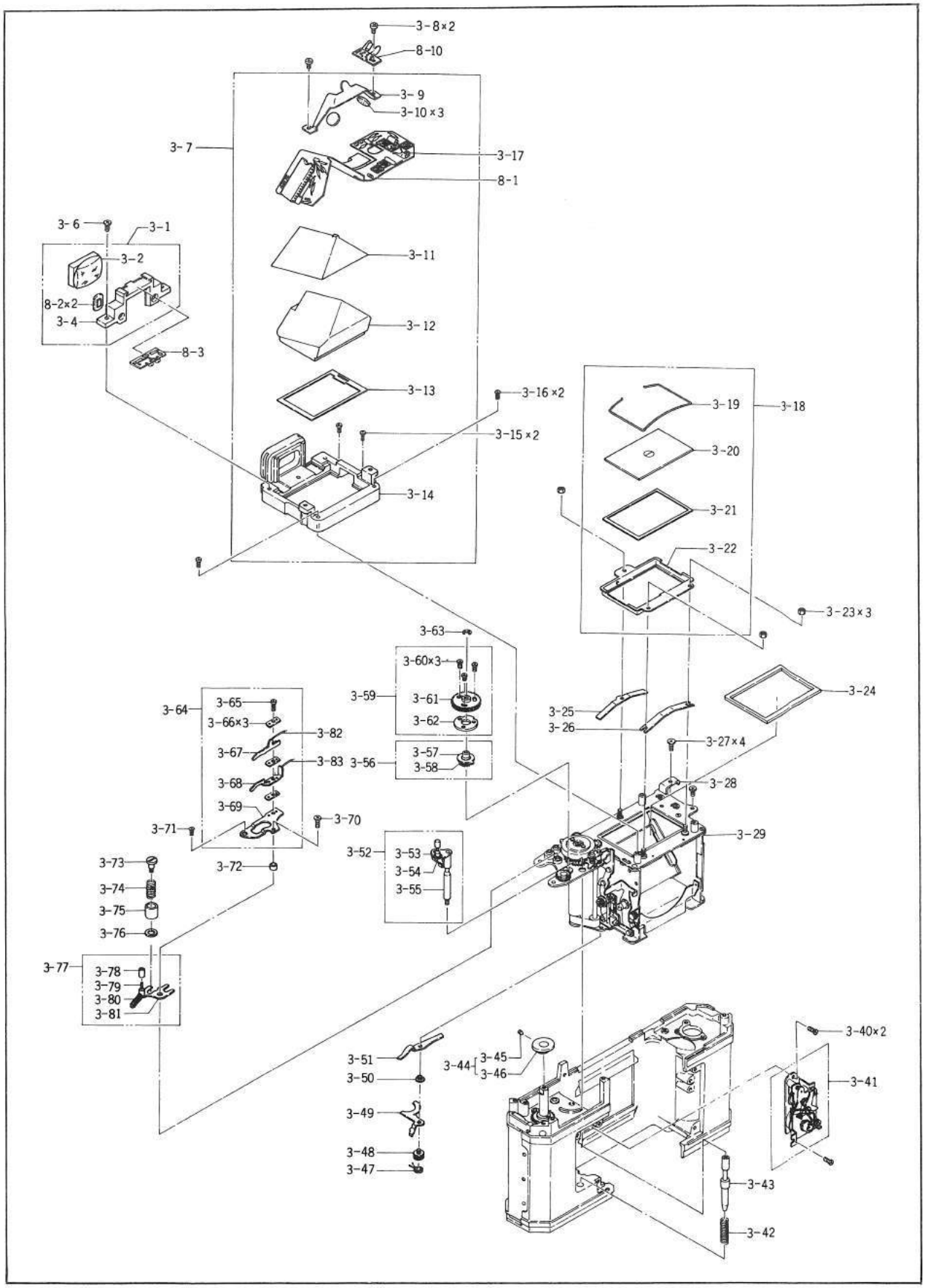
3-8×2
8-10
3-9
3-10×3
3-7
3-17
8-1
3-6
3-1
3-2
3-11
8-2×2
3-4
3-12
8-3
3-13
3-16×2
3-19
3-18
3-15×2
3-20
3-14
3-21
3-22
3-23×3
3-63
3-60×3
3-24
3-59
3-61
3-25
3-64
3-65
3-62
3-26
3-66×3
3-82
3-27×4
3-67
3-83
3-56
3-57
3-58
3-68
3-28
3-69
3-70
3-71
3-29
3-52
3-53
3-73
3-72
3-54
3-74
3-55
3-75
3-76
3-77
3-78
3-79
3-80
3-81
3-40×2
3-51
3-44
3-45
3-46
3-41
3-50
3-49
3-48
3-47
3-43
3-42

3 —4 Installing gear assembly (5 — 61)

a. Apply Helicolube/Molycote mixed grease to the shaft (5 — 46) slightly.

b. Install the gear assembly (5 — 61) in the position shown on Fig. 22 with the shutter charged.

Fig. 22

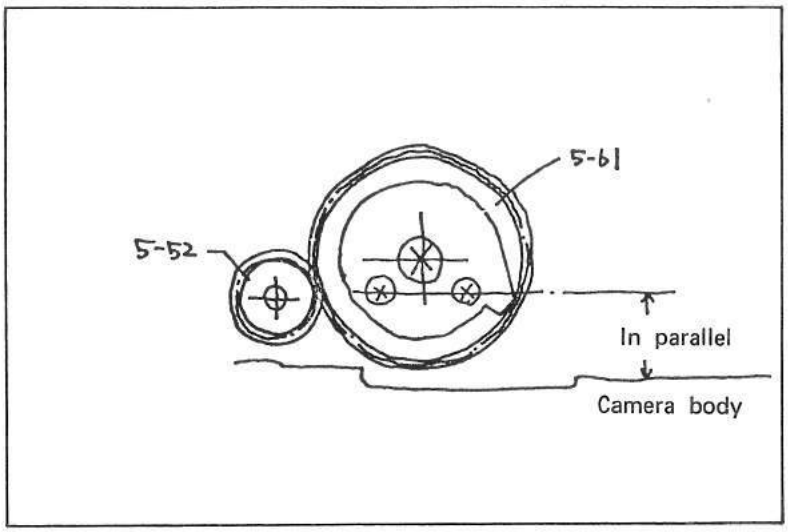

3 — 5 Adjusting shutter blind setting positions (Installing spur gear assembly (3 — 56) and clutch disc assembly (3 — 59)).

a. Make sure that the shutter blinds have been wound up completely.

b. Make sure that the spool shaft (7 — 13) has been in the returned position.

c. Install the spur gear assembly (3 — 56) in the posiiton shown in Fig. 24.

d. Install the clutch disc assembly (3 — 59) in the position shown in Fig. 24. Adjust position of the clutch disc assembly (3 — 59) so that the three set screws (3 — 60) are in the centers of the three long holes on the clutch disc assembly.

e. Apply silicon oil #20 to the shaft (4 — 48) slightly.

f. Secure the spur gear assembly (3 — 56) and clutch disc assembly (3 — 59) on the shaft (4 — 48) with the E - clip (3 — 63).

Fig. 23

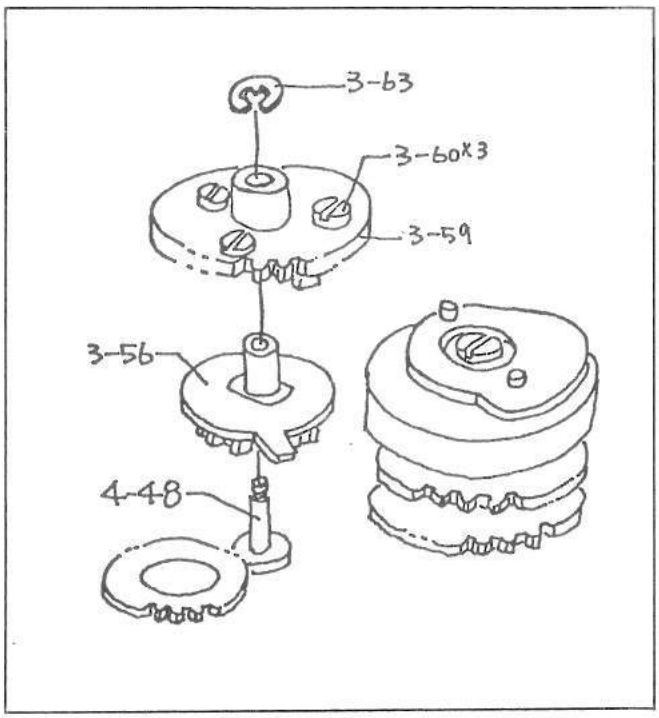

Fig. 24

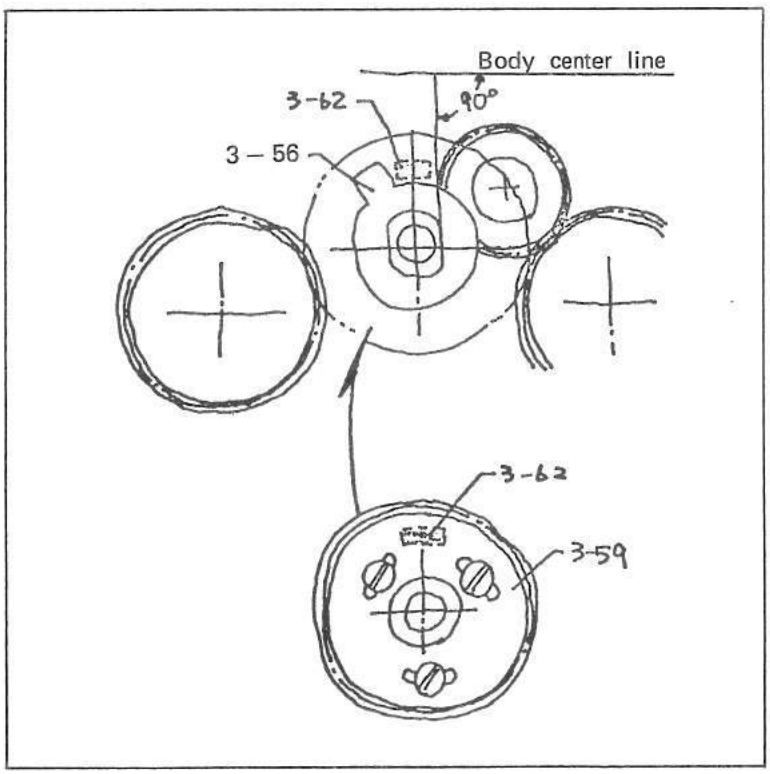

g. Tighten the set screw (7 — 96) to connect the connecting plate (7 — 97) with the connecting shaft (5 — 40).

h. Wind up the film advance lever, check the ratchet plate (7 — 92) and lever (7 — 62) for the relative position, and check the shutter blinds for their completely wound up position.
(With the shutter blinds wound up completely, the lever (7 — 62) should be in contact with 1/3 of the tooth space of the ratchet plate (7 — 92) as shown in Fig. 26. If this engagement is too deep, shutter blinds will not be wound up lightly as the film advance lever is wound up).

i. Loosen the three set screws (3 — 60), and adjust relative position between the clutch gear (3 — 61) and clutch plate (3 — 62).

Fig. 25

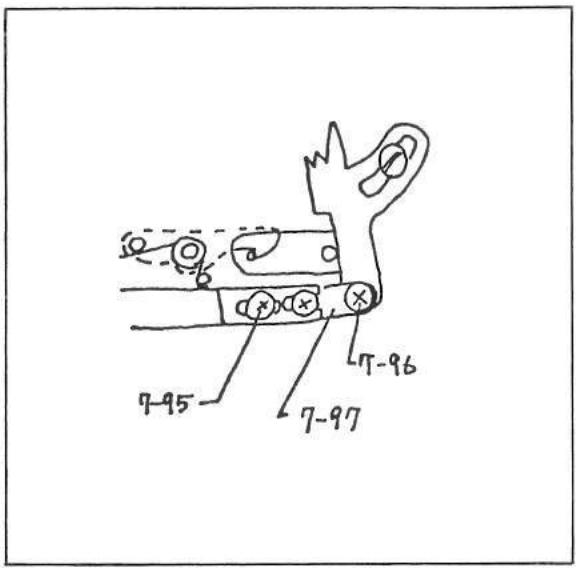

Fig. 26

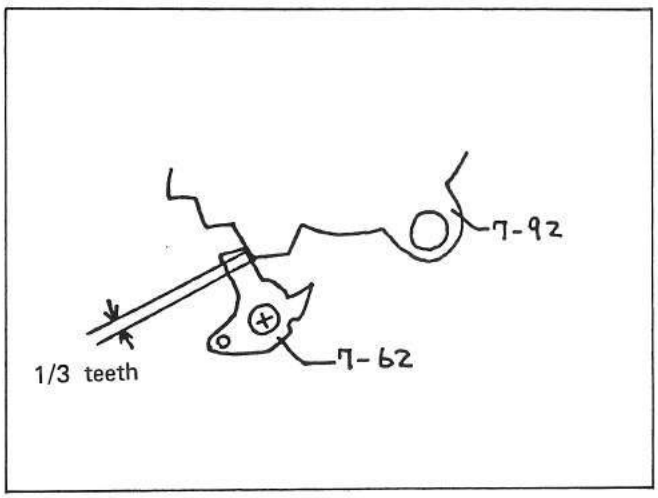

3 — 6 Adjusting set position of mirror setting mechanism

a. Wind up the film advance lever, and make sure that the ratchet plate (7 — 92) and lever (7 — 62) have engaged as shown in Fig. 27.

b. At the same time, make sure that the hook lever (5 — 28) engages with the pin (5 — 16) as shown in Fig. 28. (In this state, teh mirror setting mechanism is set).

c. Loosen the two set screws (7 — 95) and adjust length of the connecting plate (7 — 97) and mirror set lever (7 — 94).

d. When the length is adjusted completely, lock the screws with screw locking agent.

Fig. 27

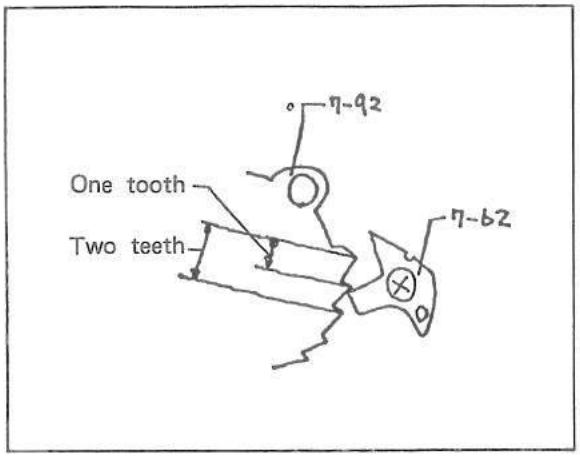

Fig. 28

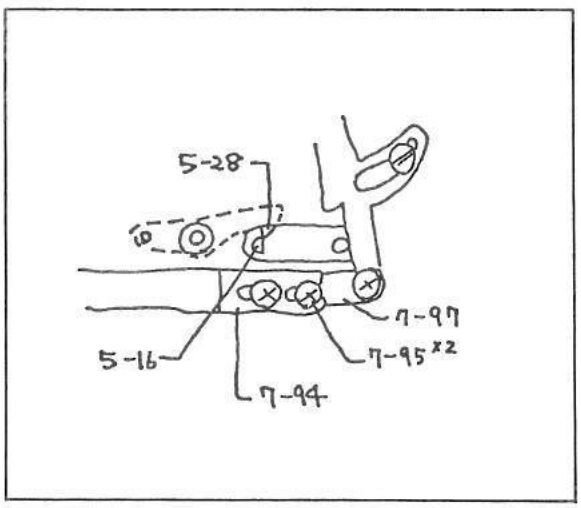

3 — 7 Shutter release

Check the shutter release to insure that:

a. Shutter releasing load is less that 400 grams. (At the time of repair, however, the shutter release may be judged satisfactory as long as shutter releasing load is less than 500 grams.

b. The shutter release shaft can be depressed down 0.2 mm to 0.5 mm after the shutter is released. When adjustment is needed, properly bend the portion "A" indicated in Fig. 29.

c. The shutter can be released by the use of the self - timer.

- The shutter should be released when approximately 10 seconds are elapsed after starting the self - timer.
- When adjustment is needed, properly bend the portion "B" in Fig. 29, or properly change the installed position of the self - timer.

NOTE: When the SN switch is changed over, electrical signal is locked. For a stable electrical circuit operation, the shutter must be released when more than 50 msec. are elapsed after the electrical signal was locked. Hence, it is desirable to adjust shutter release so that the shutter is released at a deep position.

Moreover, in the Fig. 29, properly bend the portion "A" so that a proper gap exists between the mirror start lever (3 — 51) and tapered surface of the lower shutter release shaft (3 — 43) and the lower shutter release shaft comes into contact with the mirror start lever when the lower shutter release shaft comes down causing the mirror start lever (3 — 51) to disengage with the claw (5 — 20).

Fig. 29

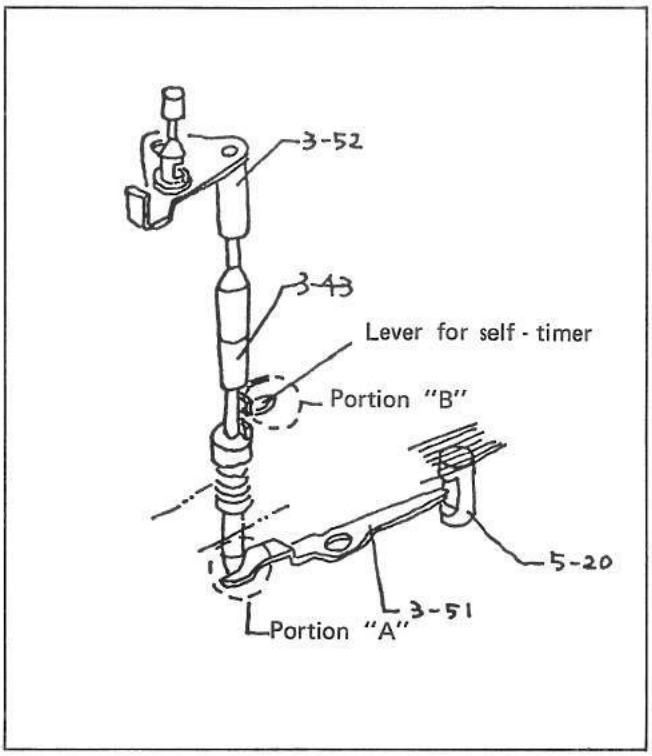
3-52
3-43
Lever for self-timer
Portion "B"
5-20
3-51
Portion "A"

Fig. 30

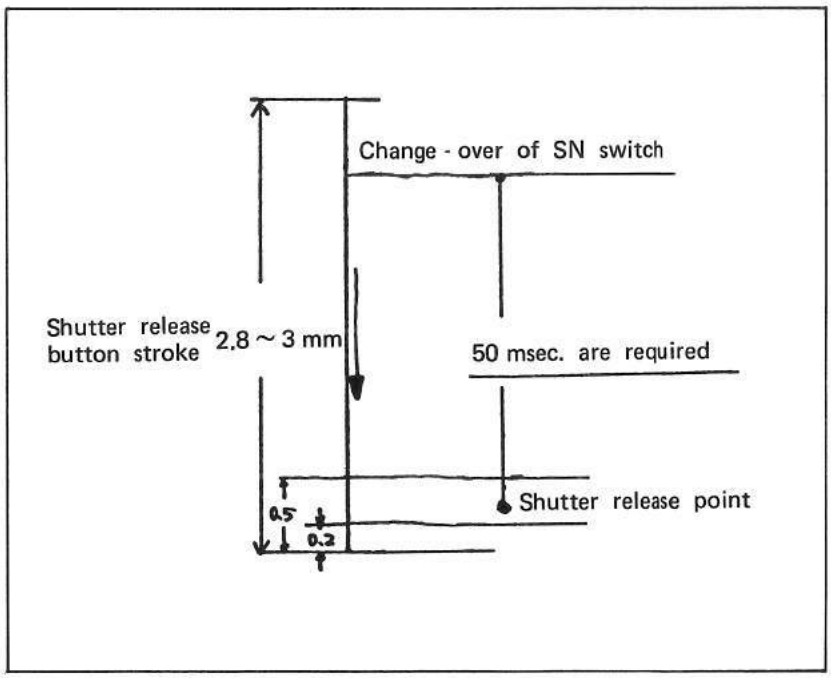
Change-over of SN switch
Shutter release button stroke 2.8 ~ 3 mm
50 msec. are required
Shutter release point
0.5
0.2

3 — 8 Installing magnet assembly

a. Magnet switch assembly (5 — 69)

- Check the attracted surface of the core (5 — 74) to insure that no dust, scar and other foreign matter exist.
- Measure both ends of the coil (5 — 73) with a tester to insure that continuity exists.
- Install the magnet switch assembly with the set screws (5 — 98 and 5 — 83).

b. SA switch (8 — 9)

- Install the SA switch (8 — 9) with the two set screws (5 — 82) carefully so as not to bend the contact and so that the contact is positioned correctly against the pin (5 — 36).
- Select a proper installing position of the SA switch and properly bend the contact so that the gap between moving contact and stationary contact is 0.5 to 0.8 mm with the film advance lever wound up completely.
- Make the moving contact free, and see if the moving contact is in the position as shown in Fig. 31 to insure that the contact pressure is sufficient.

c. Magnet lever assembly (5 — 85)

- Make sure that no oil has been applied to the shaft (5 — 42).
- Install the magnet lever assembly carefully so as not to damage or deform the springs (5 — 92 and 5 — 94).
- Tighten the set screw (5 — 84), and make sure that the magnet lever assembly (5 — 85) moves correctly. When the magnet lever assembly does not move, check the spring (5 — 92). It must have been held by the magnet lever assembly.

Fig. 31

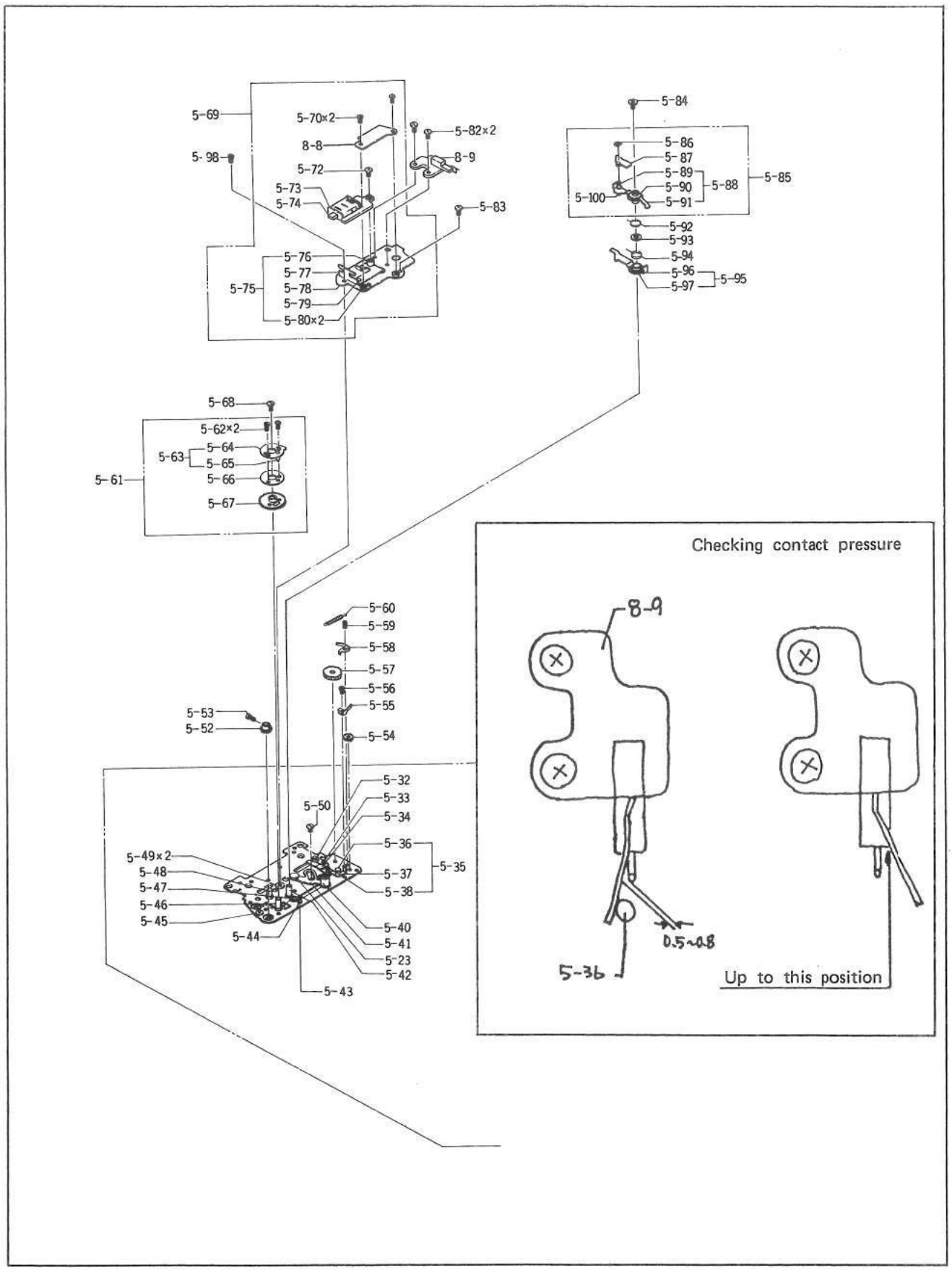
5-69
5-70×2
8-8
5-82×2
8-9
5-98
5-72
5-73
5-74
5-83
5-76
5-77
5-78
5-79
5-80×2
5-75
5-84
5-86
5-87
5-89
5-90
5-91
5-88
5-85
5-100
5-92
5-93
5-94
5-96
5-97
5-95
5-68
5-62×2
5-64
5-63
5-65
5-66
5-61
5-67
5-60
5-59
5-58
5-57
5-56
5-55
5-53
5-52
5-54
5-32
5-33
5-34
5-50
5-36
5-49×2
5-48
5-47
5-46
5-45
5-37
5-38
5-35
5-44
5-40
5-41
5-23
5-42
5-43
Checking contact pressure
8-9
0.5~0.8
5-36
Up to this position

3 — 9 Adjusting magnet assembly

First of all, check each lever to insure that it moves smoothly by the force of the appropriate spring.

a. Adjusting ratchet wheel (5 — 63)

- Wind up the film advance lever to set up the shutter.
- Adjust position of the ratchet wheel (5 — 63) so that the gap between the ratchet wheel (5 — 63) and pawl portion of the lever (5 — 91) is 0 to 0.2 mm.
- Perform the above adjustment with a backlash taken toward the direction indicated by the arrow in Fig. 33.

b. Adjusting position of the core (5 — 74)

- Adjust the ratchet wheel (5 — 63) as described in 3 — 9 — a above.
- Move the core (5 — 74) back and forth to select the best position so that the gap between the ratchet wheel (5 — 63) and lever (5 — 91) is 0.1 to 0.3 mm.

NOTE: Upon completion of the above adjustments, make sure that the core (5 — 74) and attracted contact piece (5 — 87) are in contact with their end surfaces. If any gap exists between them, the magnet does not hold the contact piece causing the shutter to always operate at 1/1000 sec. when the camera is operated under the automatic exposure mode.

c. Upon completion of the above adjustments, apply Helicolube/Molycote mixed grease to the engaging portions of the ratchet wheel (5 — 63) and lever (5 — 91).

Fig. 32

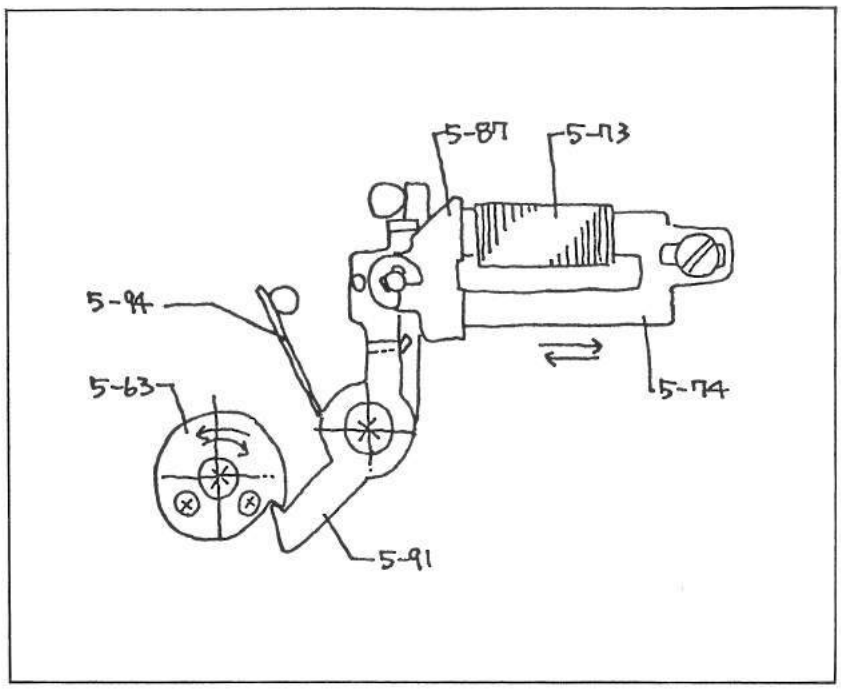

Fig. 33

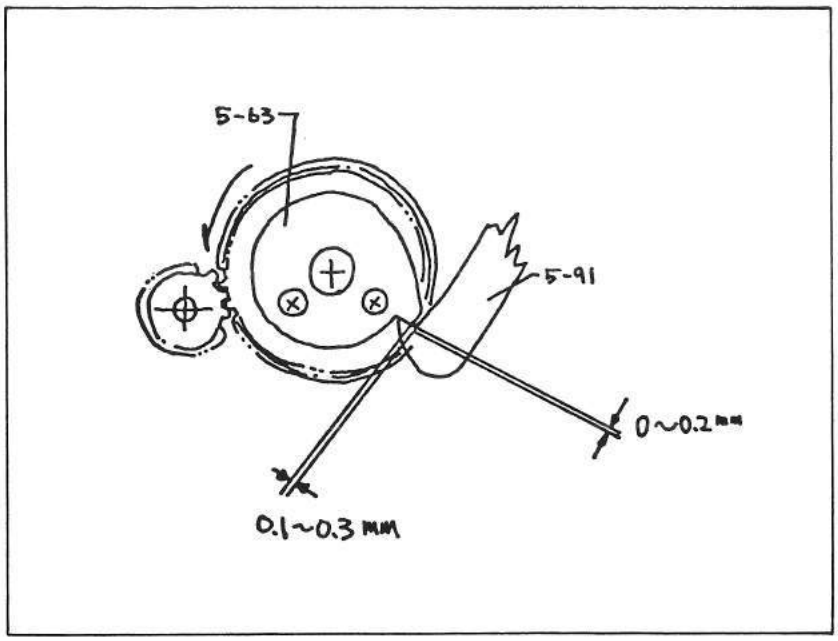

3 — 10 Spring (5 — 94)

The spring (5 — 94) functions to separate the attracted contact piece (5 — 87) from the core (5 — 74) when the magnet is demagnetized.

Various levers turn and operate during the time after an OFF electrical signal was applied to the magnet assembly until the lever (5 — 91) disengages with the ratchet wheel (5 — 63) causing the 2nd blind of the shutter to start running.

Thus, the time between the demagnetization and starting of the 2nd shutter blind can be adjusted by increasing or decreasing force of the spring (5 — 94).

However, if force of the spring (7 — 94) is too high, the attracted contact piece will not be attracted, and to avoid this trouble, three different types of spring are available.

NOTE: The time between the demagnetization and starting of the 2nd shutter blind has been adjusted at the plant. When the camera is operated under the automatic exposure mode and this time is longer than that adjusted at the plant, exposure tends to be over or this time is shorter than that adjusted at the plant, exposure tends to be under. It is not necessary to make all three different types of spring always available at the repair shop. It is easier to adjust exposure by adjusting positions of the shutter blinds.

Table 1

Part No.	gr - mm Torque	α Angle	Number of windings
50B382420	490	165°	1-1/2
50B382490	450	145°	2-31/72
50B382480	390	155°	2-29/72

Fig. 34

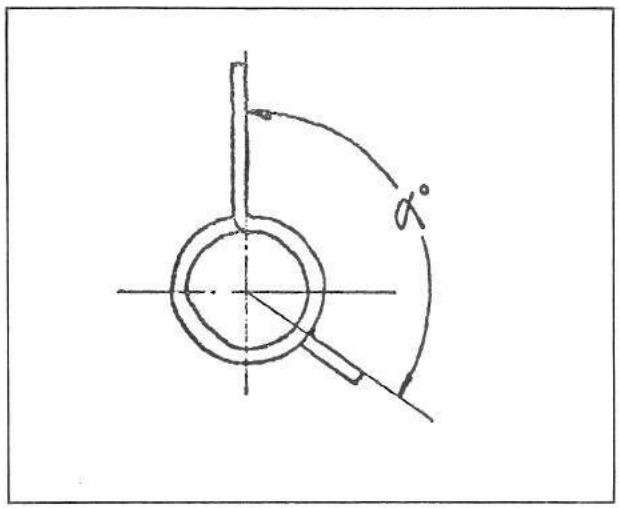

4. Adjustment of shutter speed

4 — 1 Adjusting shutter blind traveling velocity

a. The rated shutter blind traveling velocity is 12 msec. (Time within which the shutter blind travels on the 32 mm slit of a tester).

b. Make sure that difference of traveling velocity between the 1st and 2nd blinds is within 0.2 msec. (Traveling velocity of the 2nd blind should be slower than that of the 1st blind).

c. When adjusting shutter blind traveling velocity, set the shutter speed selector to 1/1000 or AUTO.

d. Shutter speed increases as the spring shafts (4 — 72 and 4 — 78) are turned toward the direction indicated by arrow in Fig. 35.

4 — 2 Adjusting kick lever (4 — 18)

a. Set the shutter, depress the shutter release lever, and make sure that the kick lever (4 — 18) enters beyond the position shown in Fig. 36 first, and then the shutter releases. When this condition is unsatisfactory, cut down the stop lever assembly (4 — 20) at the portion indicated in Fig. 36 or replace the stop lever assembly (4 — 20) with a new one.

b. Set shutter speed to 1/1000 sec., and adjust height of the kick lever (4 — 18) against the cam (4 — 6) so that more than a half of the thickness of the kick lever is below the top line of the lowest stage of the cam (4 — 6) as seen in Fig. 36. If this alignment is wrong, shutter speed will be deviated to the adjacent shutter speed of a selected shutter speed depending upon a posture of the camera.

Fig. 35

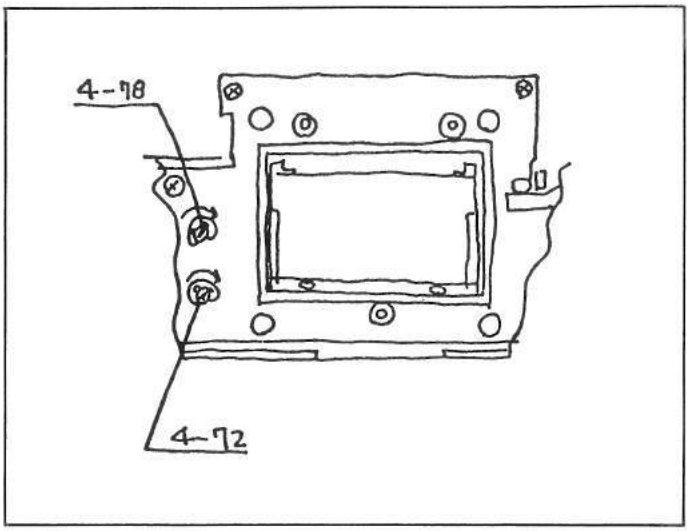
4-98
4-92

Fig. 36

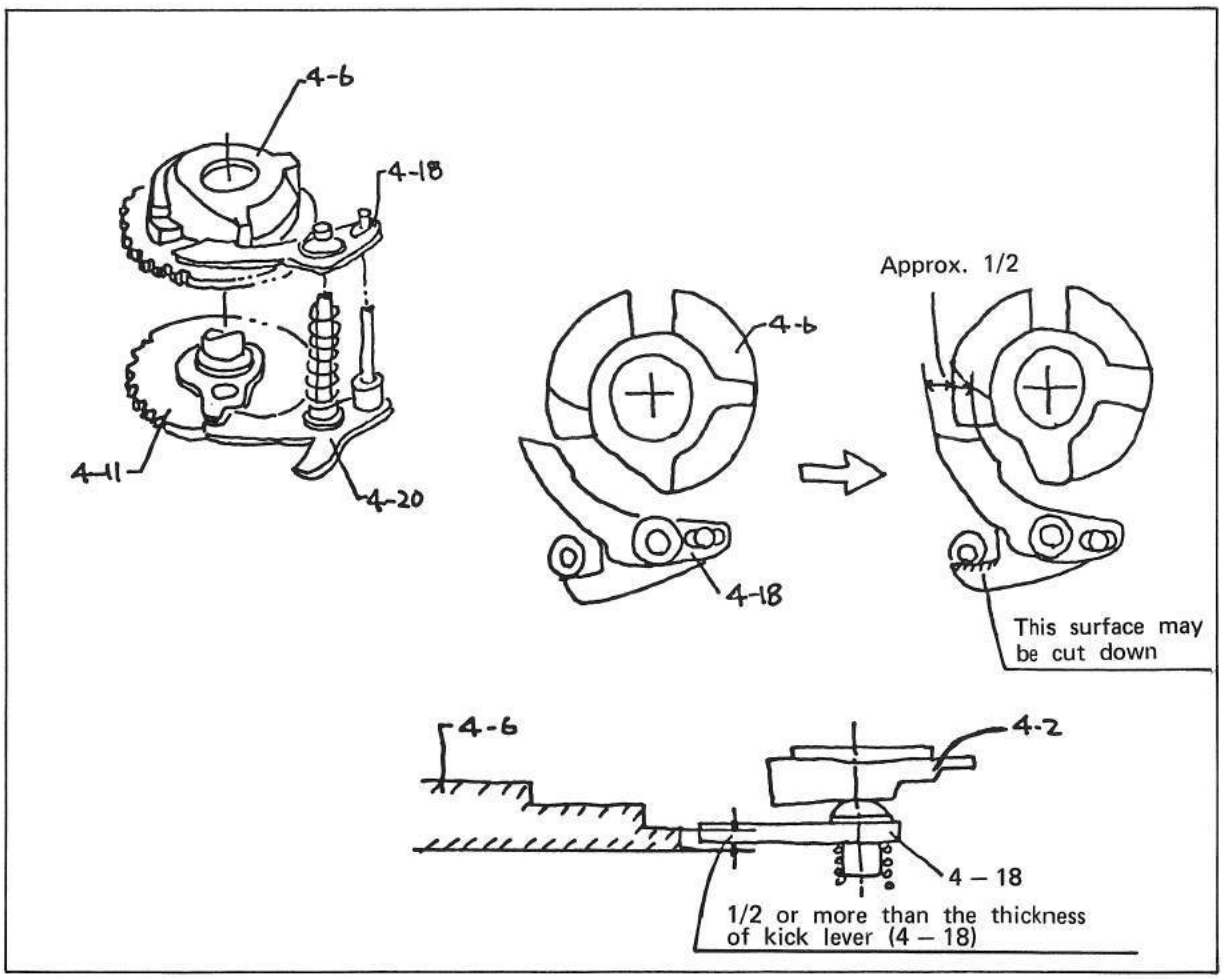
4-6
4-18
4-11
4-20
4-6
Approx. 1/2
4-18
This surface may be cut down
4-6
4-2
4 – 18
1/2 or more than the thickness of kick lever (4 – 18)

4 — 3 Adjusting manual shutter speed

For adjustment of manual shutter speed, adjust position of the cam (4 — 6).

a. Make sure that the shutter blind traveling velocity is 12 msec., and that difference of traveling velocity between the 1st and 2nd blinds is within 0.2 msec.

b. Check the relative position between the core (5 — 74) and attracted contact piece (5 — 87) and the relative position between the ratchet wheel (5 — 63) and lever (5 — 91) to insure that they are aligned correctly as described in III — 3 — 9 — a and b above.

c. Set shutter speed to 1/1000 sec., loosen the set screws (4 — 5 and 4 — 7), and adjust position of the cam (4 — 6) so that time between starting of the 1st shutter blind traveling and ending of the 2nd shutter blind traveling is within the range from 0.74 to 1.29 msec. This range (0.74 to 1.29 msec.) is a permissible range. In the actual adjustment, try to adjust position of the cam (4 — 6) so that time between starting of the 1st shutter blind traveling and ending of the 2nd shutter blind traveling is within 1.0±0.1 msec.

d. When gap △X shown in Fig. 37 is reduced, shutter blind traveling speed is shortened, and extended when gap △X is increased.

e. When shutter blind traveling speed is adjusted for 1/1000 sec. shutter speed, make sure the shutter blind traveling speeds at shutter speeds 1/250 sec. and 1/60 sec. are also within the ranges shown in Table 2.

Fig. 37

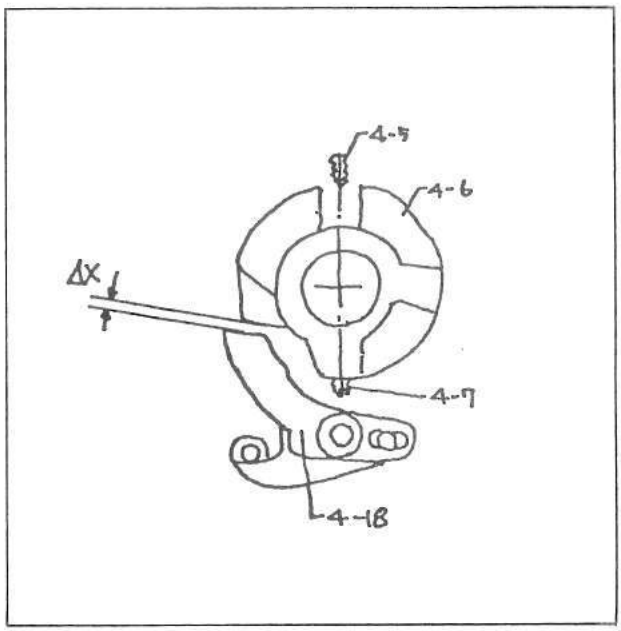

Unit of measure : msec

Table 2

Shutter speed	To be adjusted to	Inspection standard	Inspection standard or export
1/1000	0.74 – 1.29	0.69 – 1.39	0.58 – 1.64
1/250		2.86 – 5.34	2.32 – 6.57
1/60		11.4 – 21.3	11.0 – 22.1

4 — 4 Checking shutter speed "B" (Bulb)

a. Set the shutter speed selector dial to "B", and make sure that the shutter blind fully opens.

b. When the shutter blind does not fully open, check the stop lever assembly (4 — 20) for deformation, spring (4 — 24) for unhooking, and check releasing point and timing of the stopper lever operation.

4 — 5 Exposure fluctuation

Exposure fluctuation is a problem especially at high shutter speed (1/1000 sec.). Exposure fluctuation occurs when difference between 1st and 2nd shutter blind traveling velocities is excessive. On an actually exposed film, over and under exposures appear on the same picture.

To correct exposure fluctuation, check the shutter blinds and the relative parts, and replace the parts with new ones as required.

4 — 6 Bound of shutter blind

The shutter blind may bound at the end of its travel and come back into the picture frame.

A bound of the 1st blind causes an under - exposure in as much as the 1st blind bounds.

A bound of the 2nd blind causes an over - exposure in as much as the 2nd blind bounds.

a. Bound of 1st blind
The 1st blind bounds when the spring (3 — 80) is deformed.

b. Bound of 2nd blind
The 2nd blind bounds when the spring (3 — 47) is deformed.

c. When bound of shutter blind cannot be corrected by replacing the spring, replace the stopper (3 — 81), lever (4 — 17), spring (4 — 15), brake lever (3 — 49) and gear assembly (5 — 61) with new ones, and see if the bound stops.

Fig. 38

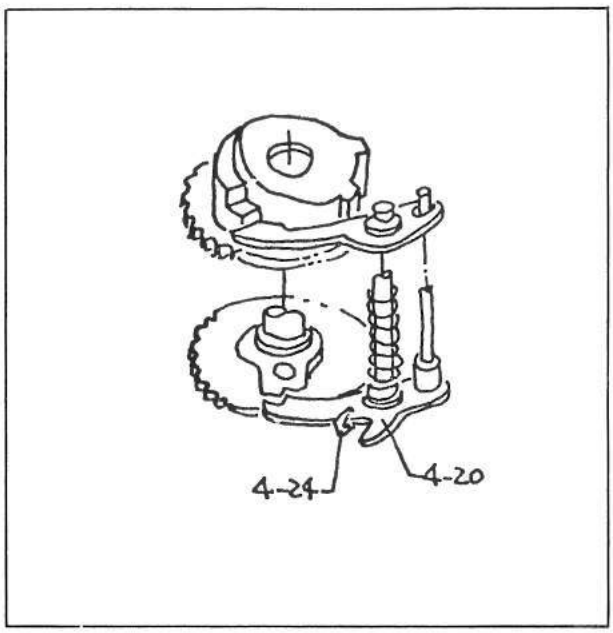

Fig. 39

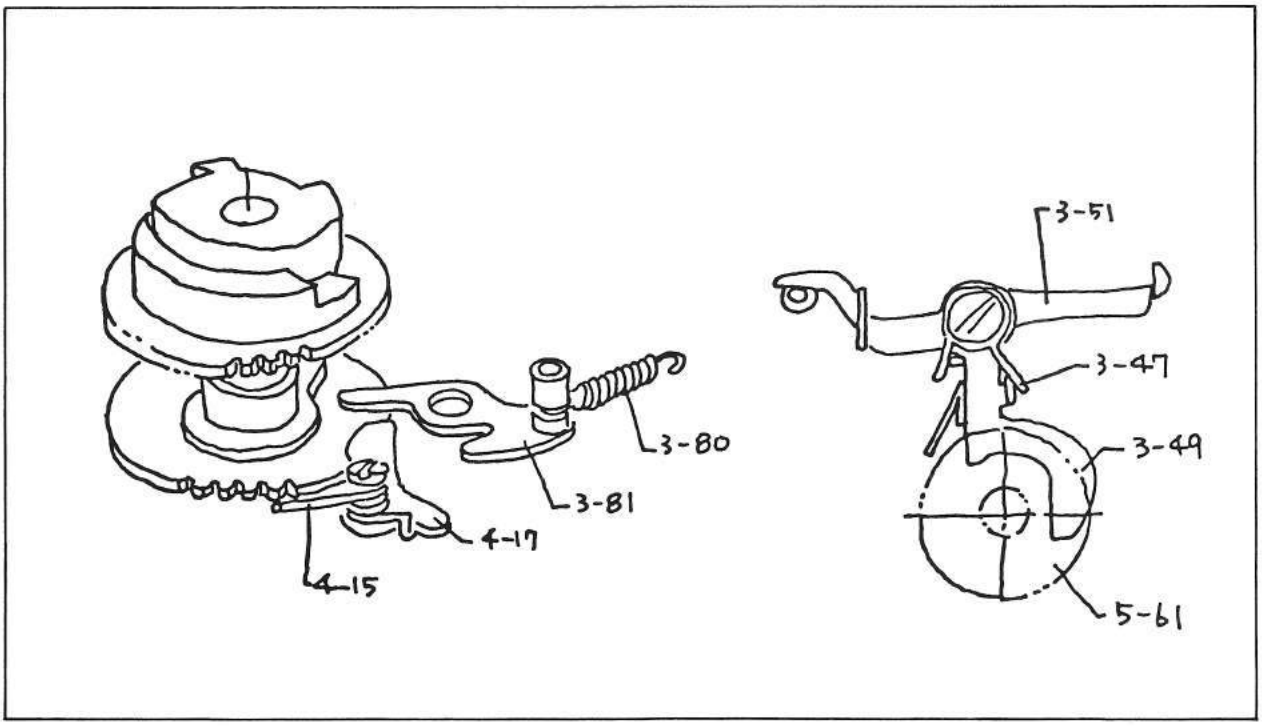

4 — 7 Synchro - delay time

The rated synchro - delay time at X - contact is 0.6 to 1.5 msec.

To adjust synchro - delay time to the rated range, adjust gap △X.

a. The synchro - contacts (6 — 29 and 6 — 31) which operate in response to a movement of the mirror are connected in series with the X - contact as shown in Fig. 41.

b. The synchro - contacts (6 — 29 and 6 — 31) must make (close) approximately 10 msec. before the shutter blind starts to travel because the synchro - contacts are located in the mechanically same position as those for Fujica ST — 901.

Fig. 40

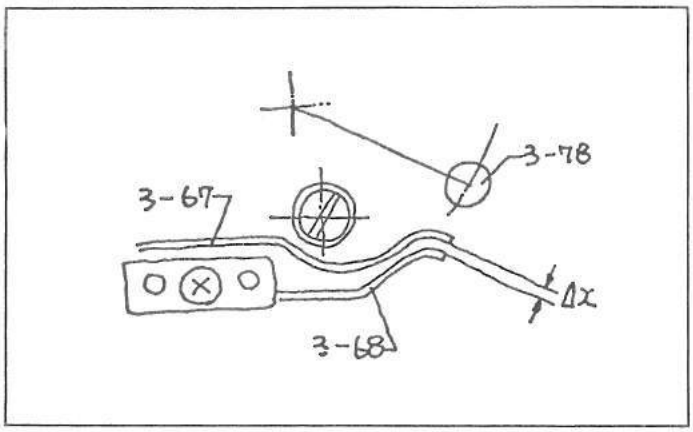

Fig. 41

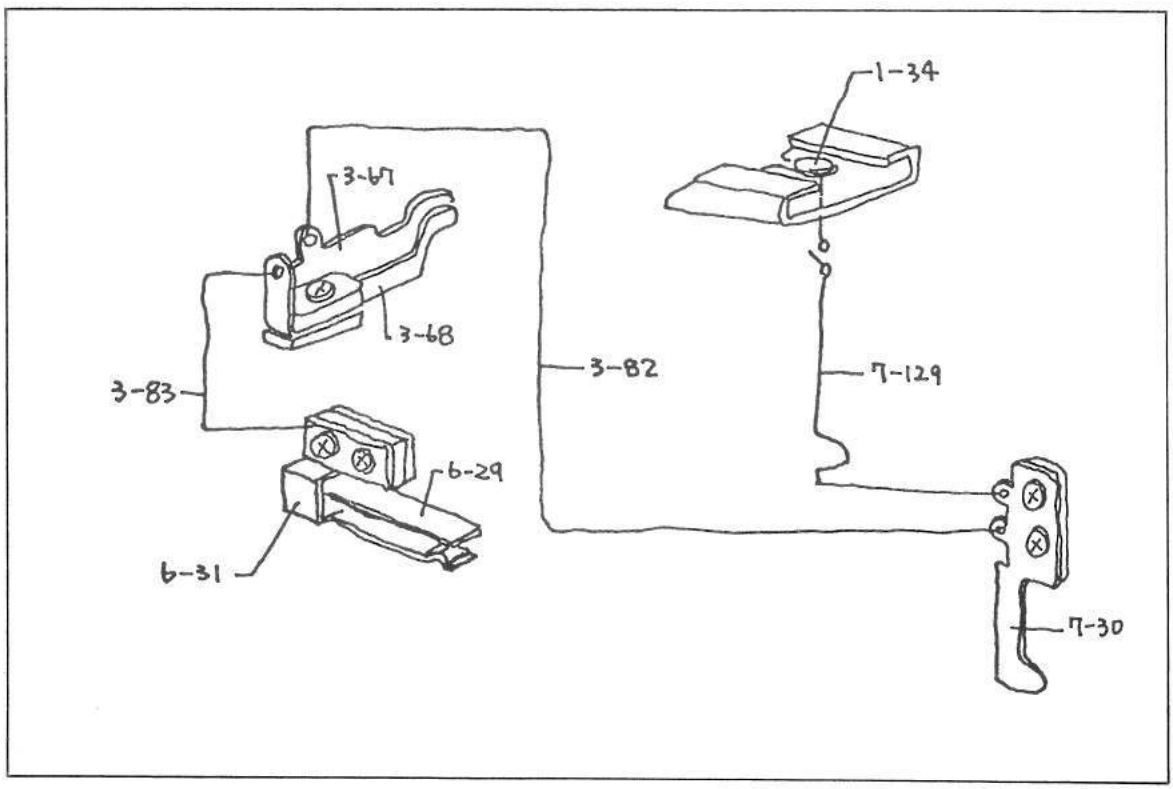

4 — 8 Shutter quick return mechanism

Wind up the film advance lever to set the shutter, hold the mirror assembly (6 — 16), release the shutter causing the mirror to rise slowly, and make sure that the shutter is released by the force of spring.

When this movement delays, shutter speed becomes abnormal at automatic exposure. (To be more specific, even if the automatic exposure mechanism has selected 1/60 or 1/30 sec., actual exposure is made at a higher shutter speed.)

To correct this trouble, improve operation of the mirror raising mechanism by lubricating the relative levers with lubricants indicated below and by making sliding surfaces of the levers smooth.

- Parts to be lubricated with silicon oil #20

  Shafts of the clutch disc assembly (3 — 59), 1st gear assembly (4 — 8), 2nd gear assembly (4 — 11), kick lever (4 — 18), stop lever assembly (4 — 20) and hook lever (5 — 28).

- Parts to be lubricated with Molycote/Helicolube mixed grease

  Sliding surfaces or shafts of the gear (7 — 9), spool holder (7 — 11), lower shutter release shaft (3 — 43), mirror start lever (3 — 51), mirror set lever (5 — 41), interlock plate assembly (5 — 17), interlock plate assembly (5 — 12), lever (5 — 27), mirror shifter assembly (6 — 37) and lever (6 — 11).

Fig. 42

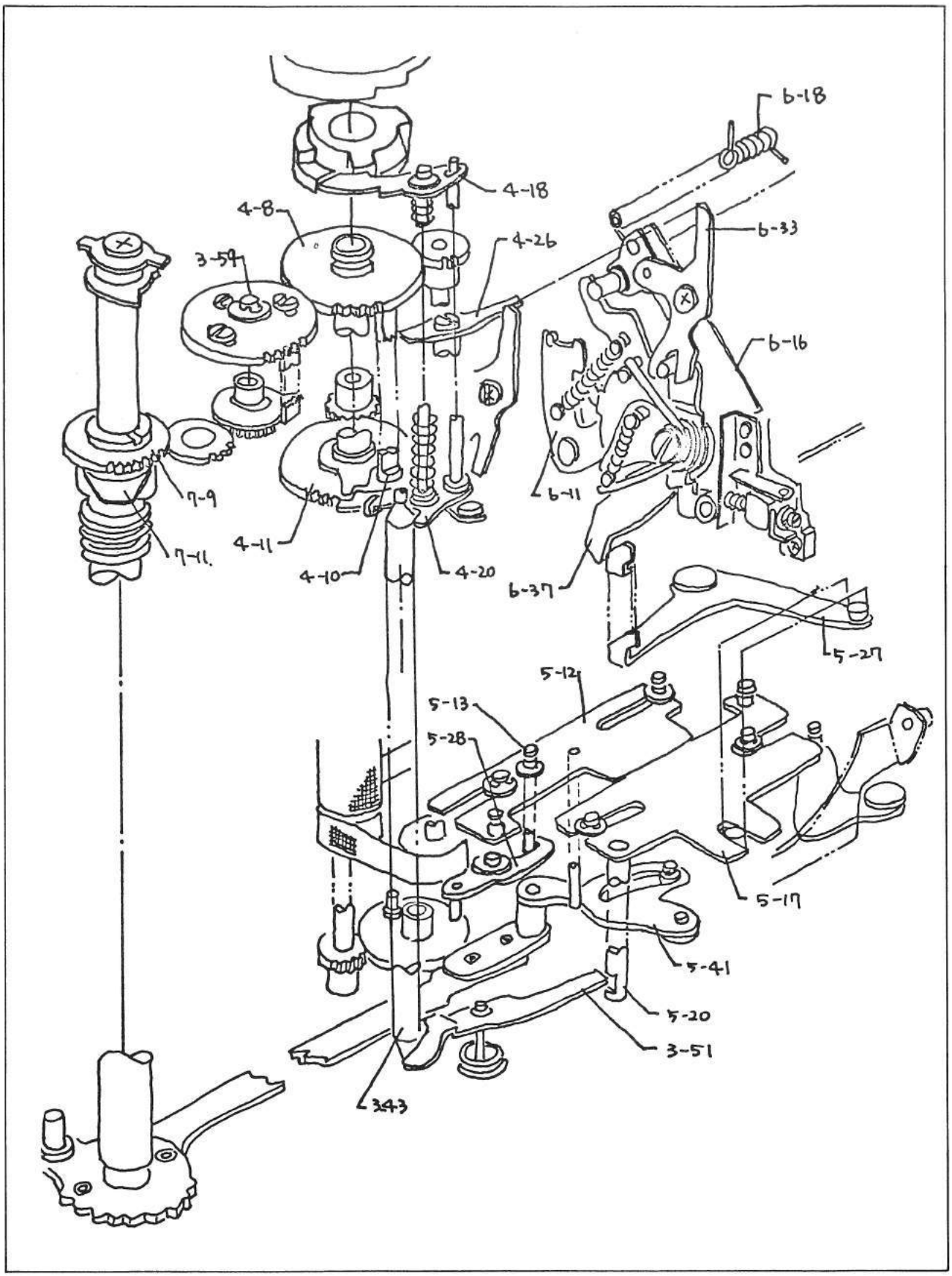
6-18
4-18
4-8
6-33
4-26
3-59
6-16
7-9
6-11
4-11
7-11
4-10
4-20
6-37
5-27
5-12
5-13
5-28
5-17
5-41
5-20
3-51
3-43

5. Adjustment of 45° alignment of the mirror

a. Adjust parallelism of the base plate of a collimator (Gokosha Model 24LT — 2D).

b. Mount the camera on a special tool (KL46A A0 — GA2) so that the camera body can be set to 45°.

c. Loosen the two set screws (6 — 28), and adjust inclination of the mirror assembly (6 — 16).

d. Adjust the set screw (6 — 94) properly so that the mirror assembly (6 — 16) is aligned in 45°.

e. Repeat the above adjustments until the center of the collimator is in agreement with the center of the chart.

f. Operate the mirror two to three times, and make sure that the 45° alignment is satisfactory.

g. When the adjustment is completed, lock the two set screws (6 — 28) and set screw (6 — 94) with Pliobond.

Fig. 43

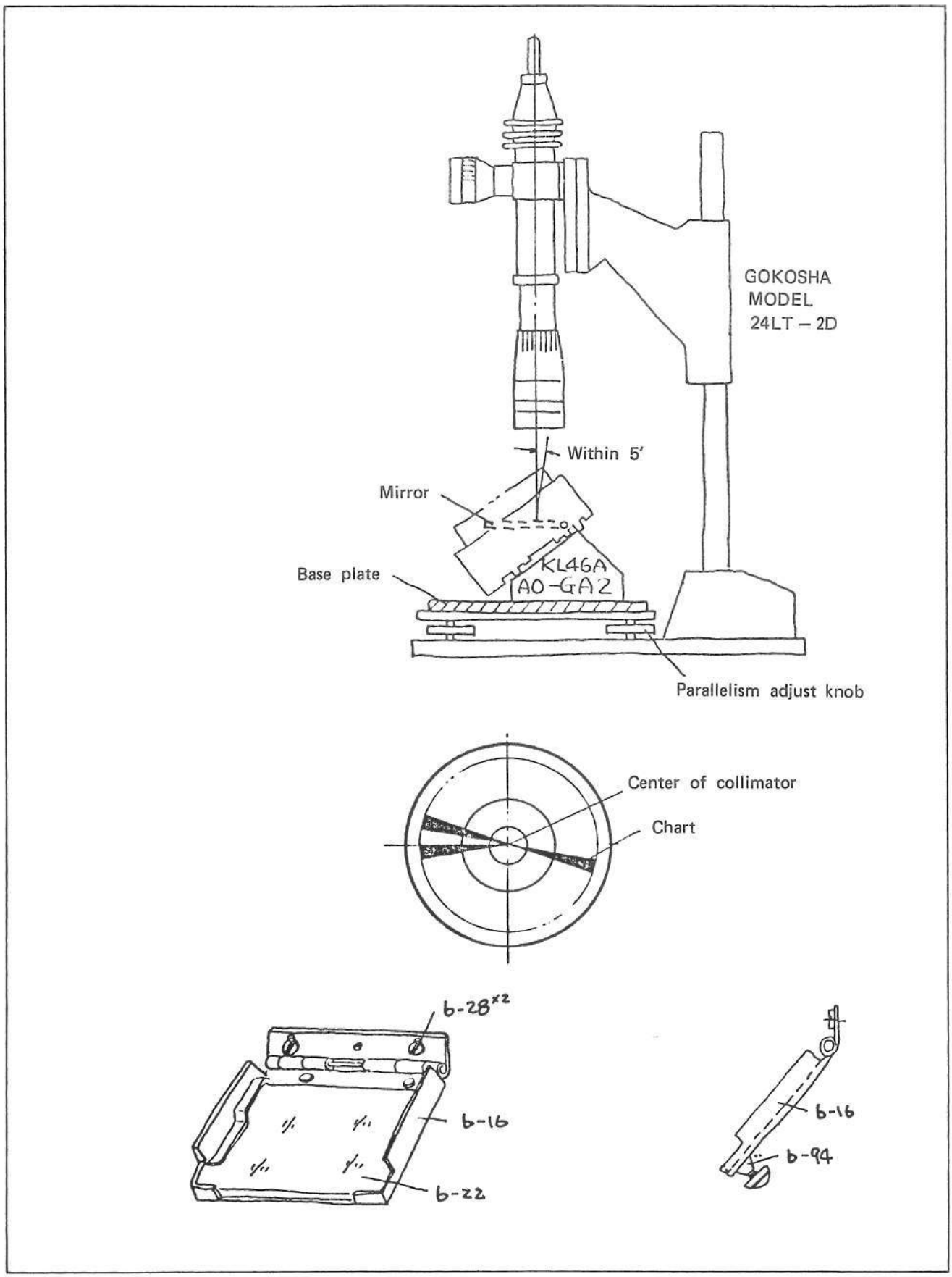
GOKOSHA
MODEL
24LT – 2D
Within 5'
Mirror
Base plate
KL46A
AO-GA2
Parallelism adjust knob
Center of collimator
Chart
b-28x2
b-16
b-22
b-16
b-94

6. Adjustment of positions of aperture resistor assembly (6 – 83)

Preparation: Replace the aperture transmission ring of a dummy lens mount (100A 1006E00 – GA25 – For Fujica ST801) with the aperture transmission ring assembly (2 – 66) of the Fujica AZ – 1. (The removed aperture transmission ring may be used for Fujica ST801 or ST705).

a. Install an F1.8/55 mm lens on the dummy lens mount, and adjust contact position. To adjust contact position, loosen the set screws (6 – 86 and 6 – 87), and properly move the aperture resistor assembly (6 – 83).

b. Check the contact plate (6 – 81) to insure that it is not floated and that it is correctly arranged. The rated contact pressure is 12 to 20 grams.

c. Contact position for stopped - down aperture metering

When a lens or accessory (for stopped - down aperture metering) having no aperture transmission ring operating pin is used, the contact gets on this position allowing the camera to make an automatic exposure at the stopped - down aperture metering.

NOTE: When the lens aperture is an automatic stop - down, be sure to stop - down the aperture to the minimum.

Fig. 44

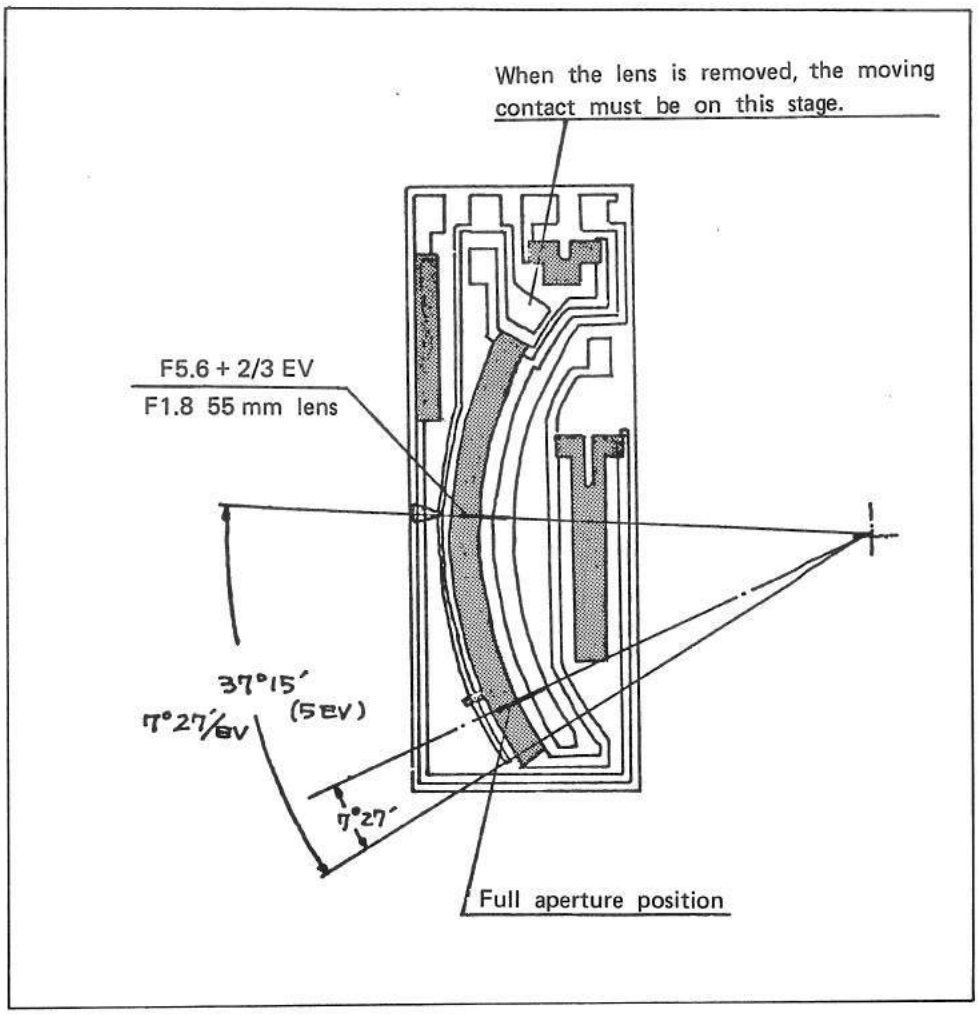
When the lens is removed, the moving contact must be on this stage.
F5.6 + 2/3 EV
F1.8 55 mm lens
37°15′
(5EV)
7°27′/EV
7°27′
Full aperture position

7. Adjustment of SC switch assembly (6 – 58)

a. With the SC switch assembly (6 — 58) separated from other parts, adjust position of the adjust screw (6 — 62) so that the gap against the switch contact (6 — 60) is 0 to 0.5 mm.

b. When the lever (6 — 40) is moved to allow the interlock lever assembly (6 — 43) engaging with the hook (portion "A" in Fig. 45) of the lever (6 — 11), the switch contact (6 — 60) must be in contact with the adjust screw (6 — 62).

c. Adjust the adjust screw (6 — 62) so that the gap between the interlock lever assembly (6 — 43) and timing lever assembly (6 — 49) is 0.2 to 0.4 mm.

Fig. 45

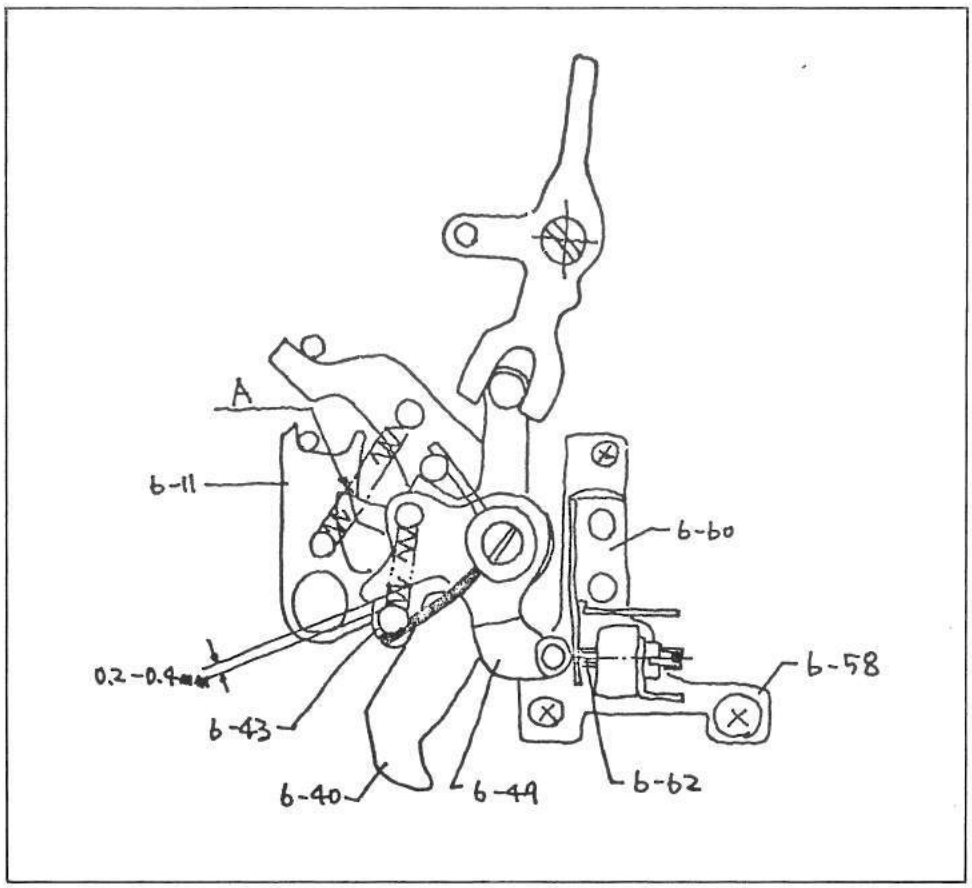

Fig. 46

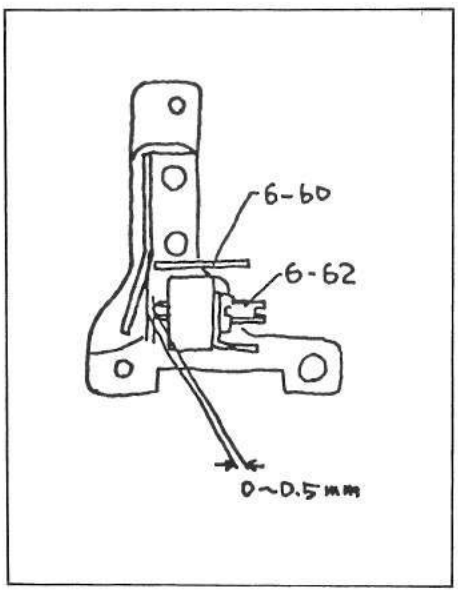

8. Installing lens mount assembly (2 – 62) and adjustment of flangeback

8 – 1 Installation

a. Install the coupling (2 – 97) on the self-timer assembly.

b. Combine the aperture transmission ring assembly (2 – 66) with the rotary plate assembly (6 – 77), and install them securely with the four set screws (2 – 99).

c. Make sure that the plate (6 – 6) is not floated. If this plate is floated, properly bend the stop-down lever assembly (6 – 69) to correct it.

8 – 2 Adjustment of flangeback

The rated flangeback (between the film plane and surface of the lens mount) is 45.45±0.025 mm.

a. Select proper washer(s) (2 – 98), and adjust flangeback to the above indicated value.

b. When the actual flangeback is more than the rating without using any washer, properly file the surface of the lens mount which comes into contact with the camera boyd.

c. The surface of the lens mount must be parallel to the film plane. When the surface of the lens mount is filed, check its parallelism against the film plane at four or more points.

Fig. 47

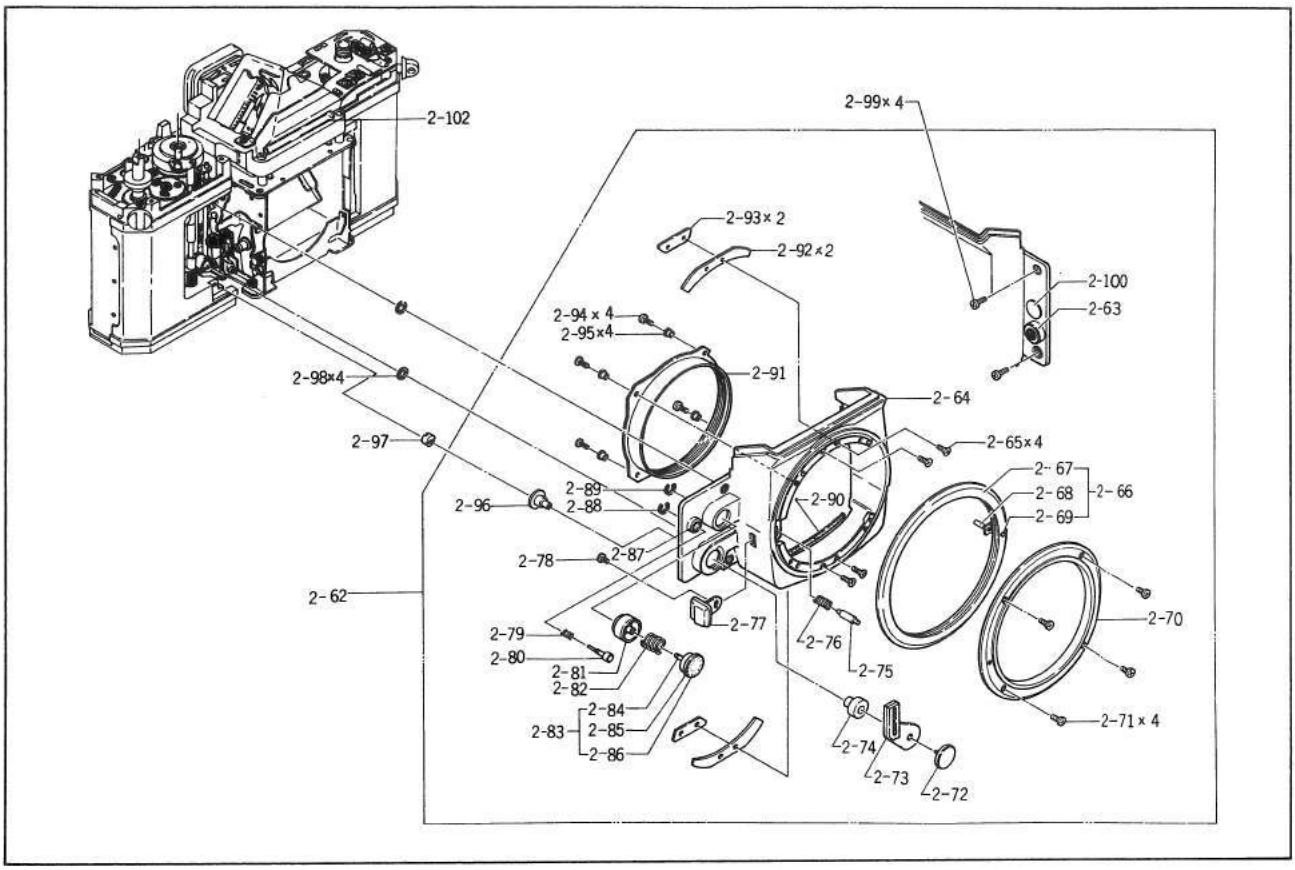
2-102
2-99×4
2-93×2
2-92×2
2-100
2-63
2-94×4
2-95×4
2-91
2-98×4
2-64
2-97
2-65×4
2-67
2-68
2-66
2-69
2-89
2-88
2-96
2-90
2-78
2-87
2-62
2-77
2-70
2-79
2-80
2-76
2-75
2-81
2-82
2-84
2-83
2-85
2-86
2-71×4
2-74
2-73
2-72

Fgi. 48

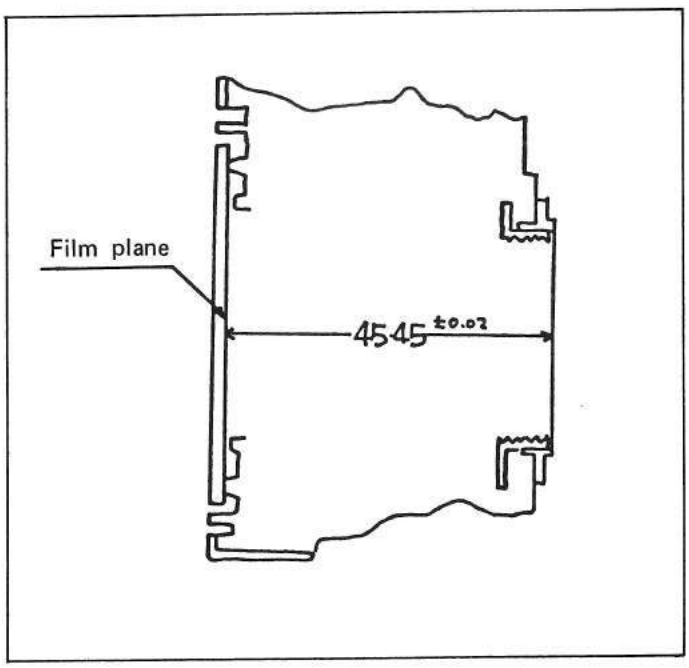
Film plane
45.45 ±0.02

9. Viewfinder

9 — 1 Adjusting focus of the viewfinder

a. Mount a lens having correct flangeback on the camera, set the focusing ring of the lens to "inf", and adjust split images so that they are in agreement.

b. When adjusting three adjust nuts (3 — 23), be sure to loosen them evenly (in same number of turns).

c. When this adjustment is completed, be sure to lock the nuts with Pliobond.

NOTE: Do not look at an object through a window glass because flatness of the window glass may not be correct.

d. When adjusting focus of the viewfinder by the use of an auto - collimator, limit focusing position within ±0.02 mm.

Fig. 49

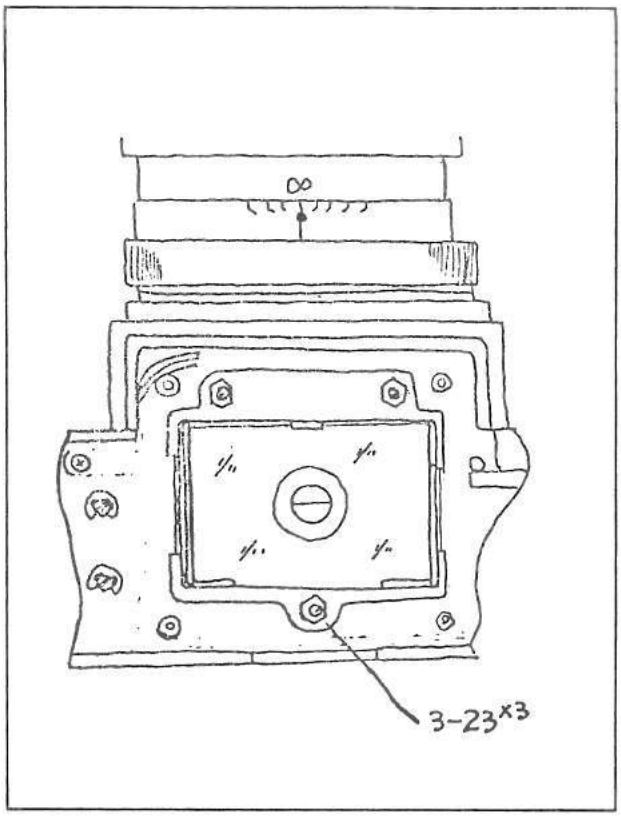

9 — 2 Installing penta prism assembly (3 — 7)

a. Match the LED of the amplifier assembly (8 — 1) with the frame assembly (3 — 13).

b. Make sure that the numbers seen in the viewfinder are positioned against the LEDs as indicated in Fig. 50. When adjusting positions of the LEDs, loosen the two set screws (3 — 15), and properly position the amplifier assembly (8 — 1). Positions of the LEDs are satisfactory as long as an LED is within the width of a number.

c. Look into the viewfinder at the center of the eyepiece, and make sure that no vignetting can be seen.

9 — 3 Vignetting in fied of view

When a remarkable vignetting exists in the field of view, check the prism (3 — 12) and focusing screen assembly (3 — 18), and replace the parts as required.

9 — 4 Cross - view

a. Make sure that cross - view (Direction of a directly seen object is deviated from that of field of view observed through the viewfinder) is within 10 cm at 5 meters.

b. When cross - view exceeds the rating, check the eyepiece lens (3 — 2) for its installed direction.

9 — 5 Image tilting

When an image in the field of view of the viewfinder is tilted more than 1°30', replace the prism (3 — 12) with a new one.

9 — 6 Coatings

a. Mirror: Alumimum extra - reflection coatng (common with Fujica ST801 and ST901).

b. Penta prism: Silver coating (common with Fujica ST705).

Fig. 50

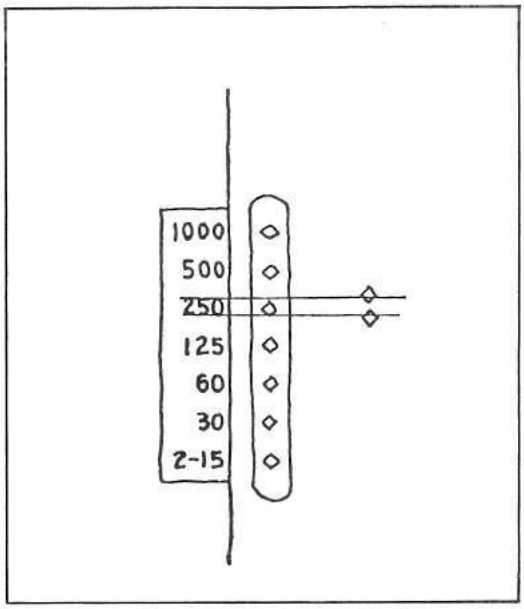
1000
500
250
125
60
30
2-15

Fig. 51

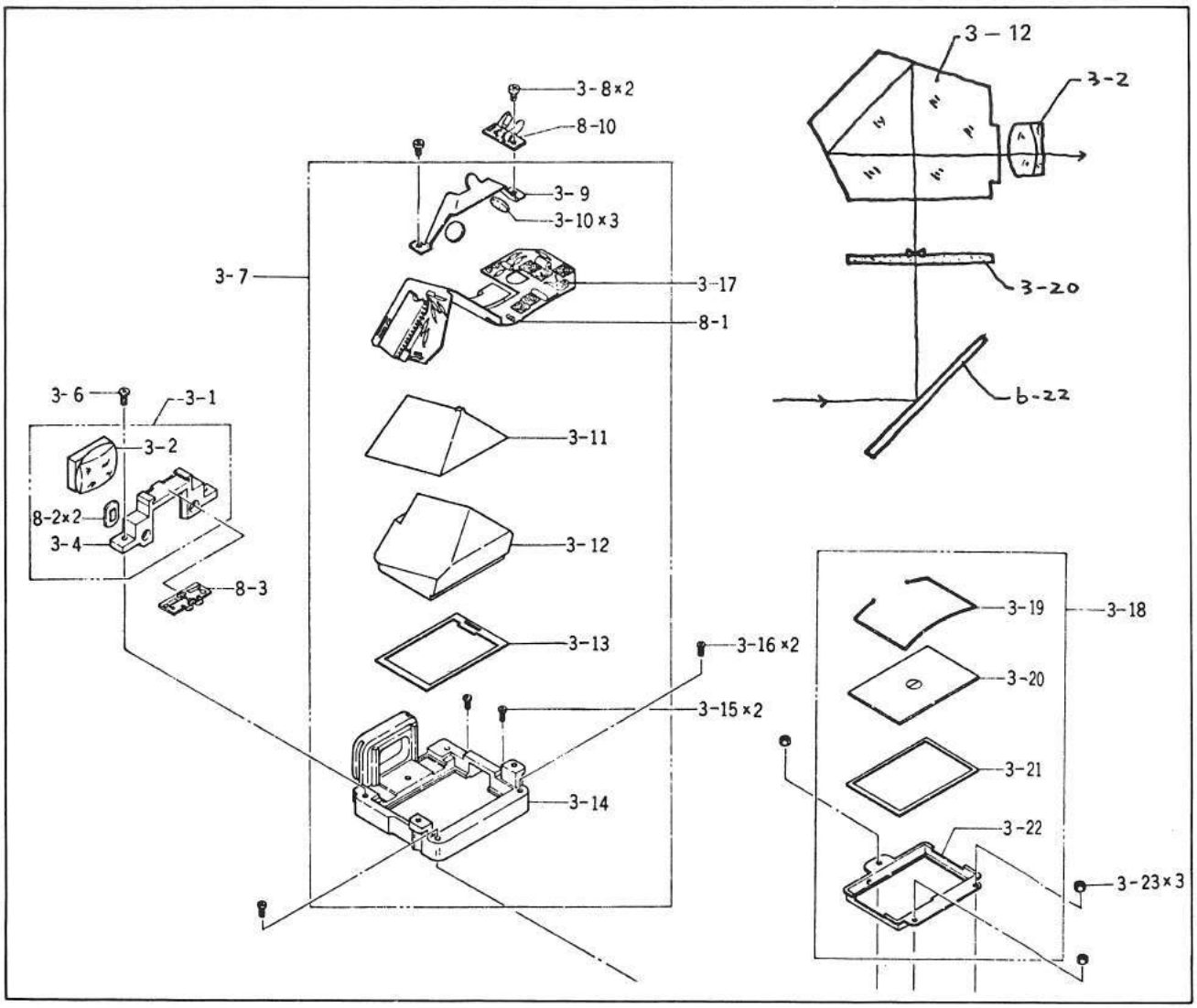
3-8×2
8-10
3-9
3-10×3
3-7
3-17
8-1
3-6
3-1
3-2
8-2×2
3-4
8-3
3-11
3-12
3-13
3-16×2
3-15×2
3-14
3-12
3-2
3-20
b-22
3-19
3-18
3-20
3-21
3-22
3-23×3

10. Installing exposure counter and adjusting advancement

a. Apply Helicolube/Molycote mixed grease to the eccentric cam assembly (3 — 44).

b. With care exercised on the lever assembly (2 — 42) and interlock pin (2 — 51) of the exposure counter assembly (2 — 29) for their positions, install the exposure counter assembly (2 — 29) securely with the two columns (2 — 28).

c. Wind up the film advance lever, and make sure that the exposure counter advances one exposure by one exposure correctly.

When the exposure counter does not advance correctly, properly bend the feed claw (2 — 46) and stop claw (2 — 41) so that the exposure counter advances correctly.

d. Open the back cover, and make sure that the exposure couter resets to "S" (zero - reset). When the exposure counter does not zero - reset correctly as the back cover is opened, properly bend the lever assembly (2 — 42).

11. Installing shutter resistor assembly (2 – 1)

a. Set the focal plane shutter to the position for "B".

b. Set the click plate portion of the shutter resistor assembly (2 — 1) to the position for "B".

c. Position the coupling (2 — 27) as shown in Fig. 52.

d. Insert the guide pin (2 — 14) into the opening on the connecting plate (3 — 53), and install the shutter resistor assembly (2 — 1).

e. Make sure that the pin enters the coupling (2 — 27) correctly and that the dial turns 360°.

f. When the click operation is unsatisfactory, check the coupling (2 — 27) for defective groove.

NOTE: Be sure to set the focal plane shutter and click plate portion of the shutter resistor assembly to their positions for "B" before installing the shutter resistor assembly. At other positions, the switch spring (2 — 15) will be deformed.

Fgi. 52

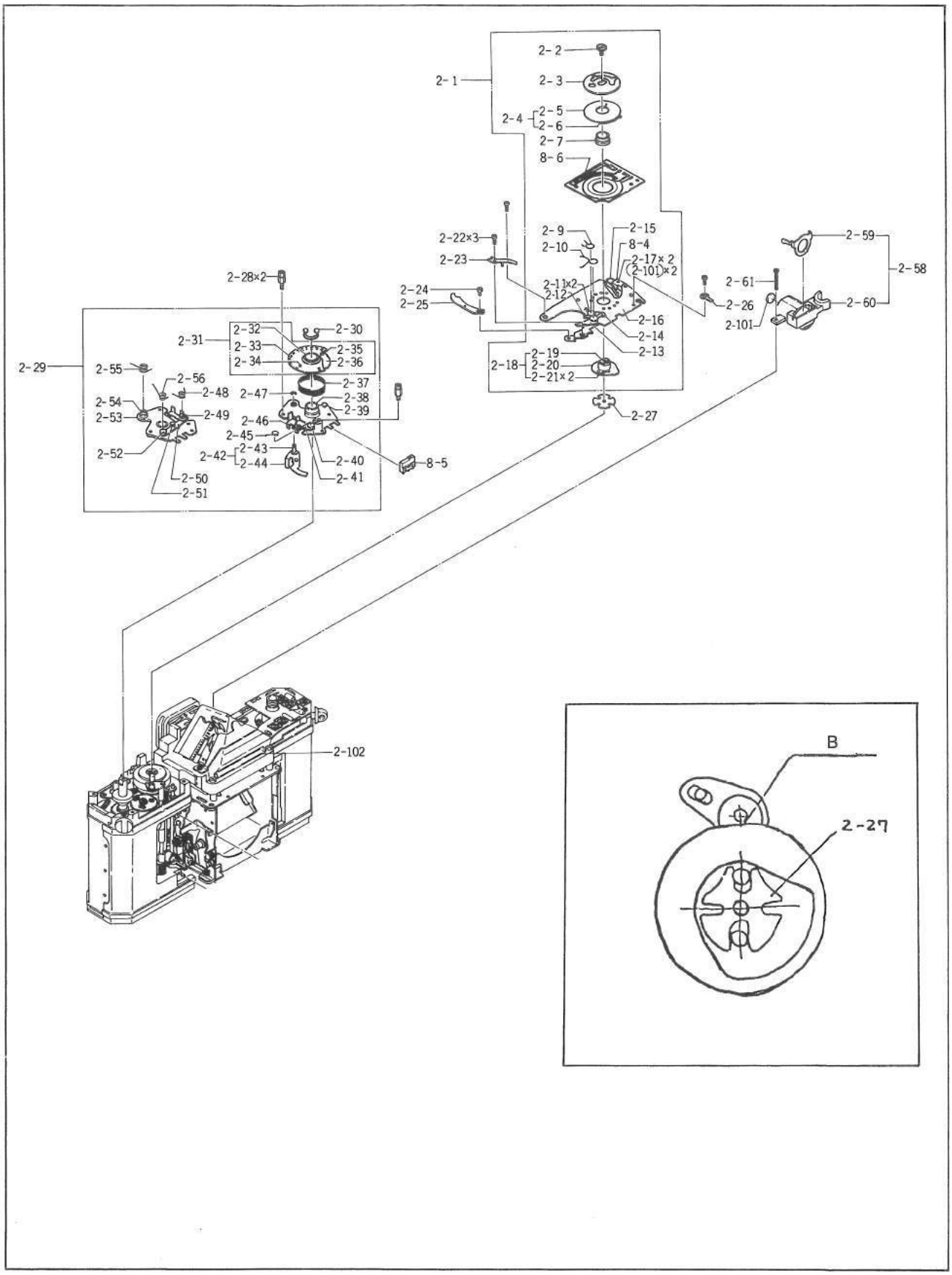
2-1
2-2
2-3
2-4
2-5
2-6
2-7
8-6
2-22×3
2-23
2-9
2-10
2-15
8-4
2-17×2
(2-101)×2
2-11×2
2-12
2-24
2-25
2-16
2-14
2-13
2-18
2-19
2-20
2-21×2
2-27
2-59
2-58
2-61
2-26
2-60
2-101
2-28×2
2-29
2-31
2-32
2-30
2-33
2-35
2-34
2-36
2-37
2-55
2-56
2-48
2-47
2-38
2-39
2-54
2-53
2-49
2-46
2-45
2-52
2-42
2-43
2-44
2-40
2-41
8-5
2-50
2-51
2-102
B
2-27

12. Adjusting SM switch (8 – 4) and SN switch (8 – 5)

12 – 1 SM switch (8 – 4)

a. Turn the dial and make sure that:

(1) The SM switch (8 – 4) turns on at positions +2, +1, AUTO, –1 and –2.

(2) The SM switch (8 – 4) turns off at positions 1/1000, 1/250, 1/60 and B.

b. When adjustment is needed, properly bend the switch spring (2 – 15).

12 – 2 SN switch (8 – 5)

a. Make sure that the SN switch turns on and off under an interlock motion with the shutter release shaft.

(1) When the switch is not changed over with the shutter release shaft lowered, increase force of the leaf spring (2 – 23).

(2) When the switch is not changed over with the shutter release shaft raised, reduce force of the leaf spring (2 – 23).

b. Make sure that the shutter release shaft is raised by force of the spring (3 – 42) without fail.

c. The rated switching load of the SN switch (8 – 5) is 90 to 100 grams.

d. When the side which should turn on as the shutter release button is depressed is faulty, the LED will not light.

When the side which should turn on as the shutter release button is returned is faulty, the LED will not go out and film advance lever will not be wound up.

Fig. 53

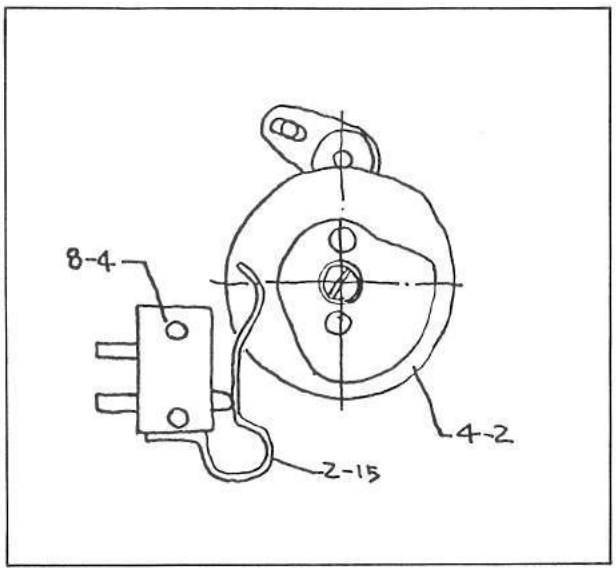

Fig. 54

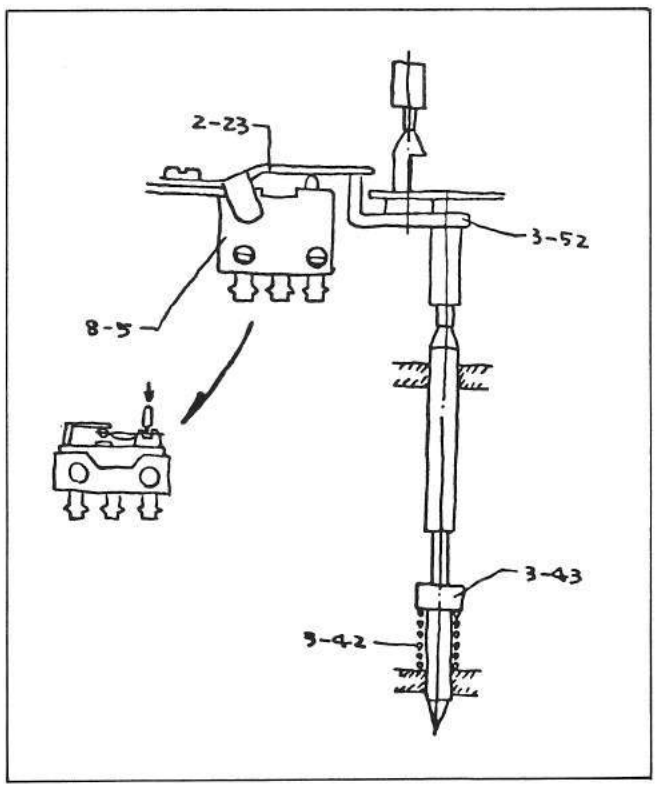

13. Adjusting film advancement lock and release mechanism

Make sure that the film advance lever cannot be wound with the shutter release button depressed.

Make sure that the shutter release button cannot be depressed with the film advance lever wound in a half way.

a. Depress the shutter release shaft (3 — 55), and make sure that the end of the lever (2 — 13) enters the notched portion of the square hole plate (1 — 73) causing the film advance lever not to be wound. Further, make sure that the film advance lever can be wound when the release shaft is returned.

b. Make sure that the end of the lever (2 — 14) enters the notched portion of the shutter release shaft (3 — 55) causing the shutter release shaft not to be depressed with the film advance lever wound in a half way. Further, make sure that the shutter release shaft can be depressed when the film advance lever is wound completely causing the square hole plate (1 — 73) to return to the original position.

c. Turn the shutter dial with the shutter release button depressed, and make sure that the shutter dial can be turned 360°.

   When the shutter speed is adjusted and the shutter dial drags, the slope of the cam (4 —6) is defective. Correct the slope with a file.

Fig. 55

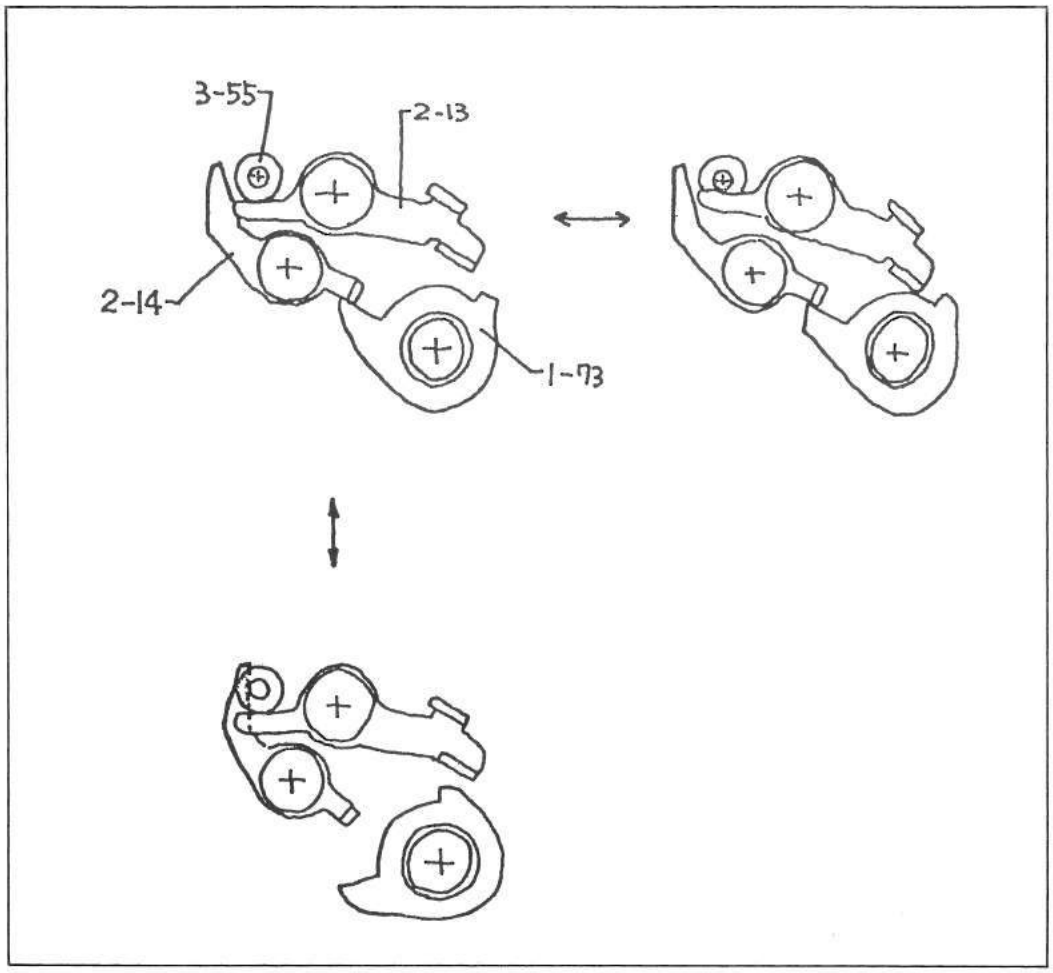

Fig. 56

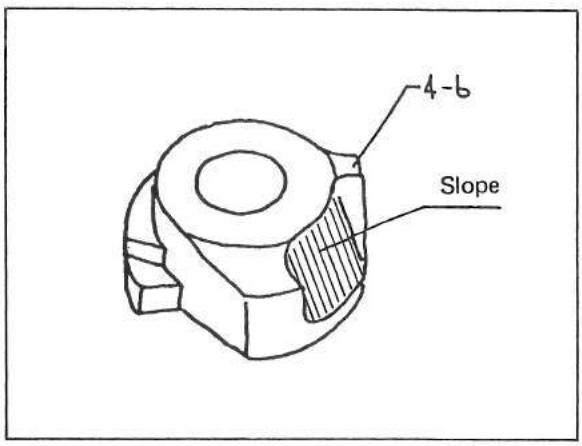

14. Installing lens mount assembly (2 – 62)

14 – 1 Adjustment of step between P - mount ring and lens mount ring

a. The rated step between the P - mount ring (2 – 91) and lens mount ring (2 – 70) is 5/100 to 15/100 mm.

b. Method of adjustment

(1) Select an F1.8/55 mm lens having a correct stop position of the thread.

(2) Screw the lens into the lens mount assembly until it becomes heavy.

(3) With the aperture selector set to F1.8, make sure that the center between F - numbers F4 and F11 is immediately above the lens.

c. Method of repair

(1) When the lens cannot be mounted tightly, replace the bushing (2 – 95) to a longer one. When the step between P - mount ring and lens mount ring is too shallow, the lens cannot be mounted securely.

(2) When the lens cannot be mounted lightly and smoothly, remove the P - mount ring (2 – 91), and slightly apply Losoid grease or silicon grease after cleaning the thread.

When the step between P - mount ring and lens mout ring is too deep, replace the bushing (2 – 95) with a shorter one.

Fig. 57

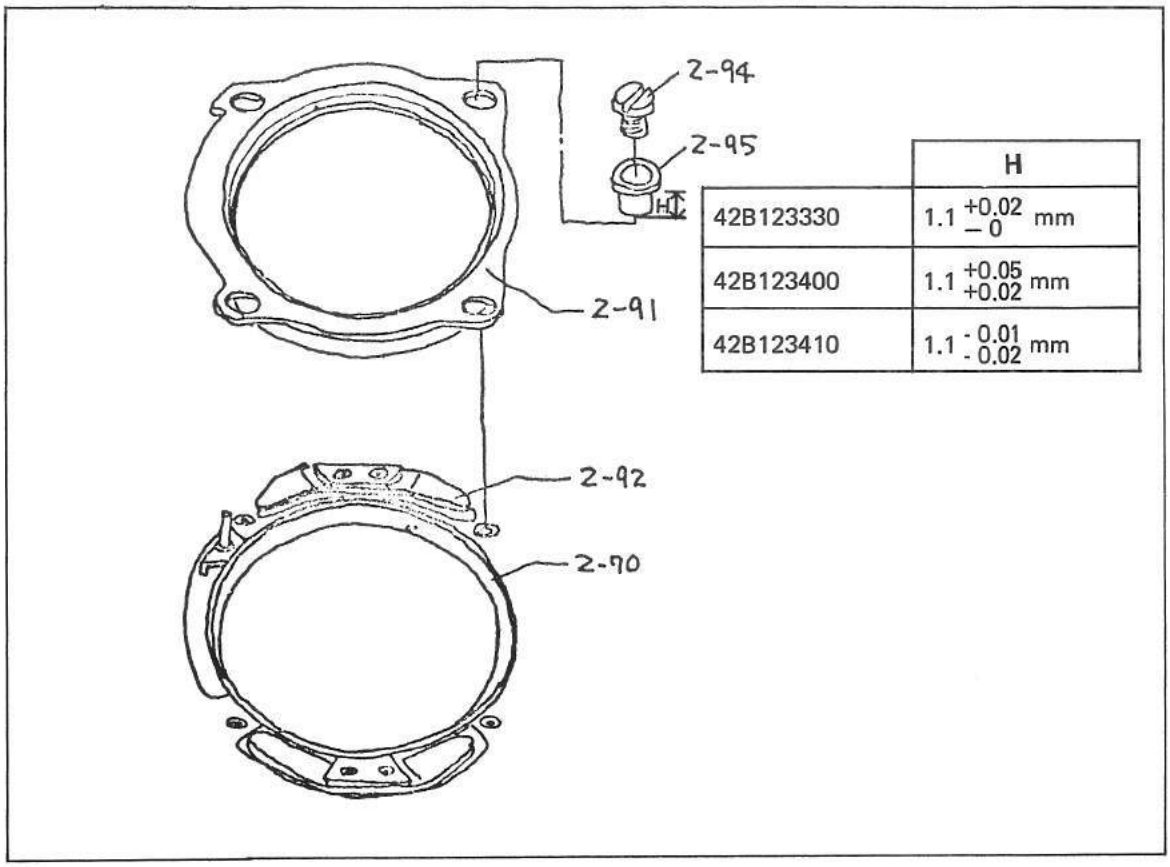

	H
42B123330	$1.1\ ^{+0.02}_{-0}$ mm
42B123400	$1.1\ ^{+0.05}_{+0.02}$ mm
42B123410	$1.1\ ^{-0.01}_{-0.02}$ mm

Fig. 58

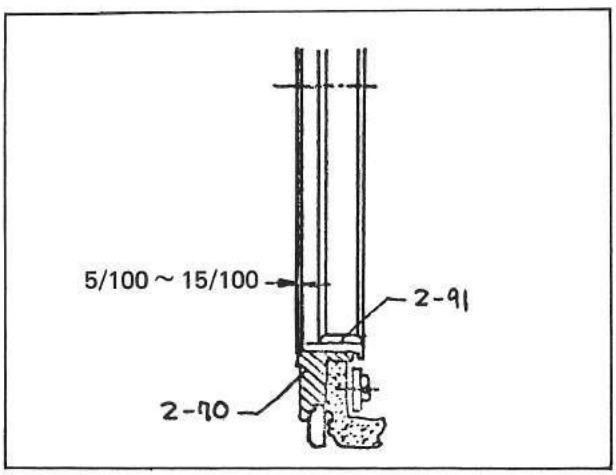

Fig. 59

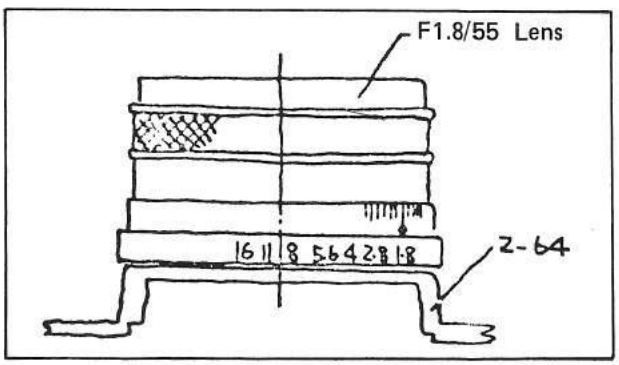

14 — 2 Aperture transmission ring assembly (2 — 66)

a. Make sure that the aperture transmission ring assembly moves smoothly without any dragging.

b. Make sure that the aperture transmission ring is caused to reset smoothly by an operation of the rotary plate assembly (6 — 77) of the aperture resistor assembly.

c. The aperture interlock pin (2 — 68) has a semicircle cross - section.

Make sure that the flat line of the pin is parallel to the center line of the P - mount ring as indicated in Fig. 60.

14 — 3 Positioning pin (2 — 75)

a. Make sure that the positioning pin (2 — 75) is projected $0.7^{+0}_{-0.2}$ mm above the end surface of the lens mount ring (2 — 70).

b. Mount a lens, and make sure that the positioning pin clicks.

Fig. 60

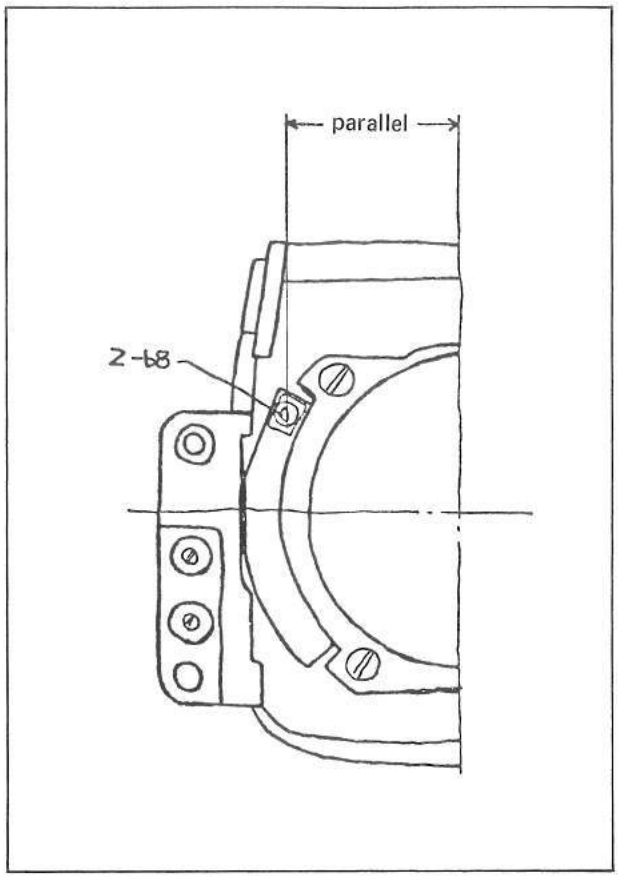

Fig. 61

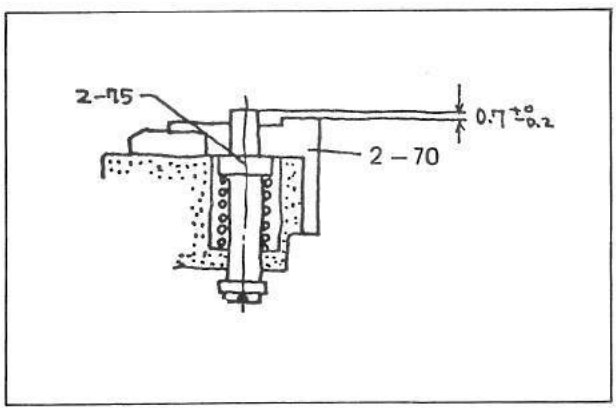

15. Electric circuit wiring

- Connect wires as indicated on the wiring diagram.
- Perform preliminary soldering on lead wires sufficiently and reduce volume of solder picked up on the soldering iron so that no excessive solder remains on the terminals of the circuit pattern.

  When the circuit is dirty with flux, clean it with alcohol.
- Carefully control temperature of the soldering iron when soldering.
- Neatly align lead wires so that none of them is held by other parts and no electrical part is held by the lead wires.
- Be sure to remove slag of solder.
- When a solder tube having flux in it was used, be sure to clean the soldered portion and its surroundings with alcohol thoroughly.

Fig. 62

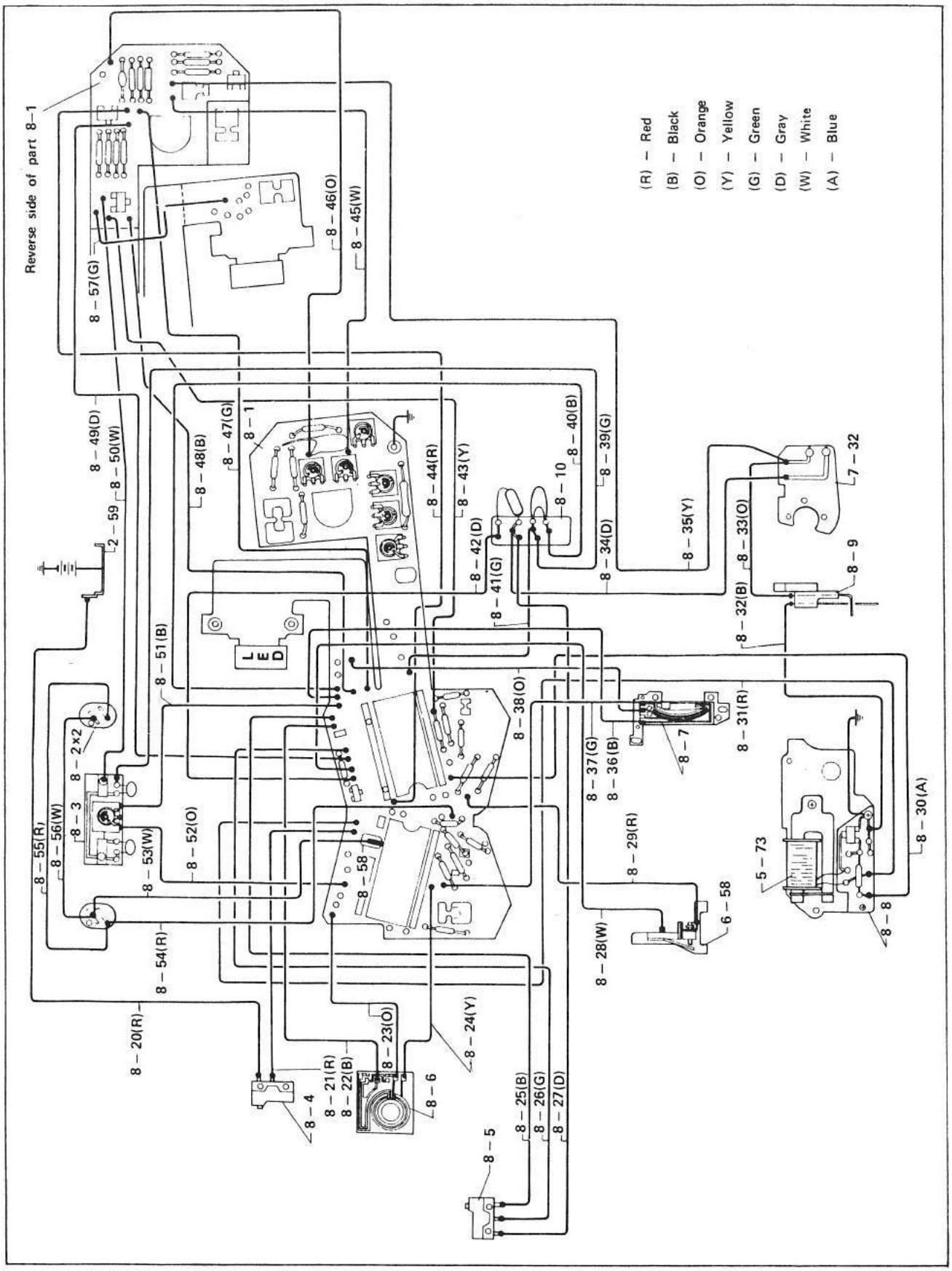
Reverse side of part 8-1
(R) – Red
(B) – Black
(O) – Orange
(Y) – Yellow
(G) – Green
(D) – Gray
(W) – White
(A) – Blue
8 – 57(G)
8 – 46(O)
8 – 45(W)
8 – 49(D)
8 – 50(W)
2 – 59
8 – 48(B)
8 – 47(G)
8 – 1
8 – 44(R)
8 – 43(Y)
8 – 40(B)
8 – 39(G)
8 – 10
8 – 42(D)
8 – 41(G)
8 – 34(D)
8 – 35(Y)
8 – 33(O)
7 – 32
8 – 9
8 – 32(B)
8 – 51(B)
L E D
8 – 38(O)
8 – 31(R)
8 – 37(G)
8 – 36(B)
8 – 7
8 – 2×2
8 – 3
8 – 55(R)
8 – 56(W)
8 – 53(W)
8 – 52(O)
8 – 58
8 – 29(R)
5 – 73
8 – 30(A)
6 – 58
8 – 8
8 – 28(W)
8 – 54(R)
8 – 20(R)
8 – 23(O)
8 – 24(Y)
8 – 21(R)
8 – 22(B)
8 – 6
8 – 4
8 – 25(B)
8 – 26(G)
8 – 27(D)
8 – 5

16. Adjustment of electrical system

16 — 1 Adjusting Vsf voltage

- Load new batteries or apply DC 4.0V.
- Mount an F1.4/50 mm lens on the camera, and set film speed and aperture respectively to ASA100 and F5.6.
- Turn on the SM and SN switches (condition under which the shutter release button is depressed in a half way), and adjust the variable resistor (8 — 133) so that voltage across the camera body (ground) and terminal "a" shown on Fig. 63 is 1300±30 mV. To measure voltage use a digital voltmeter (impedance: 100 MΩ or more) as shown on the Fig. 63.
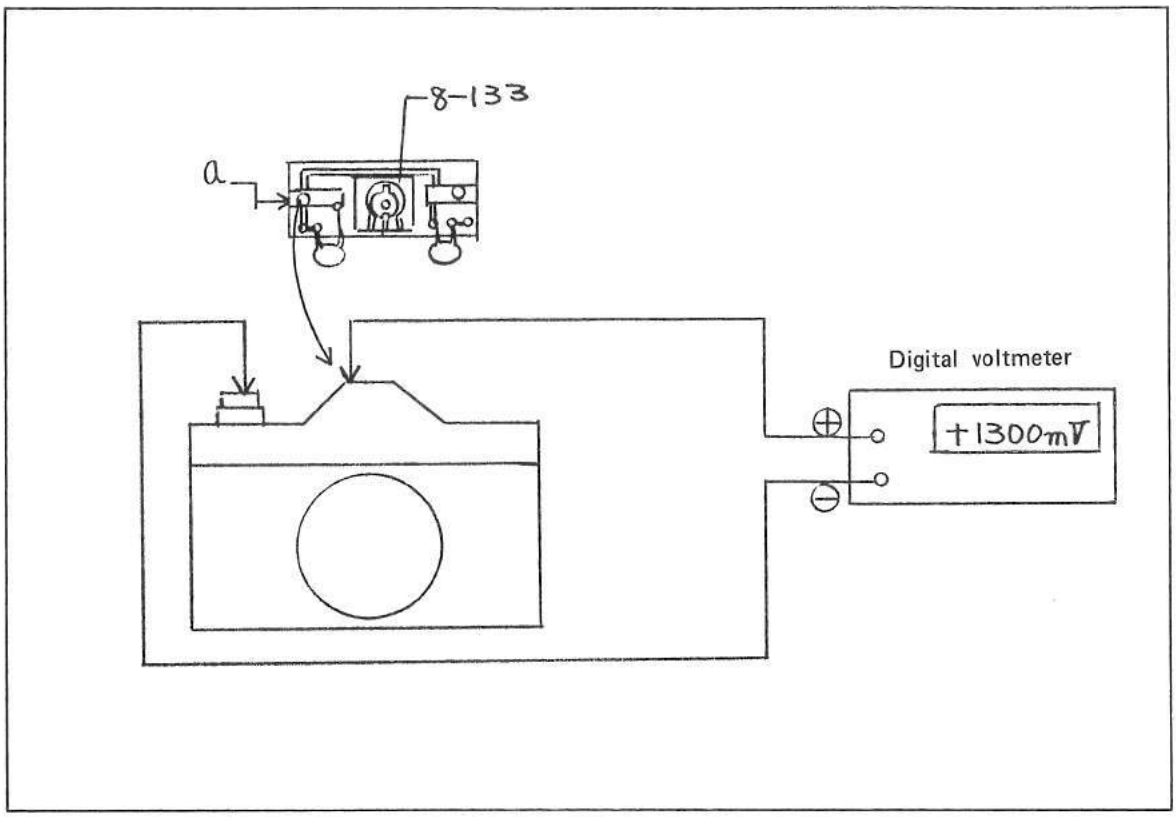
Fig. 63